Current and voltage transformers

Включение

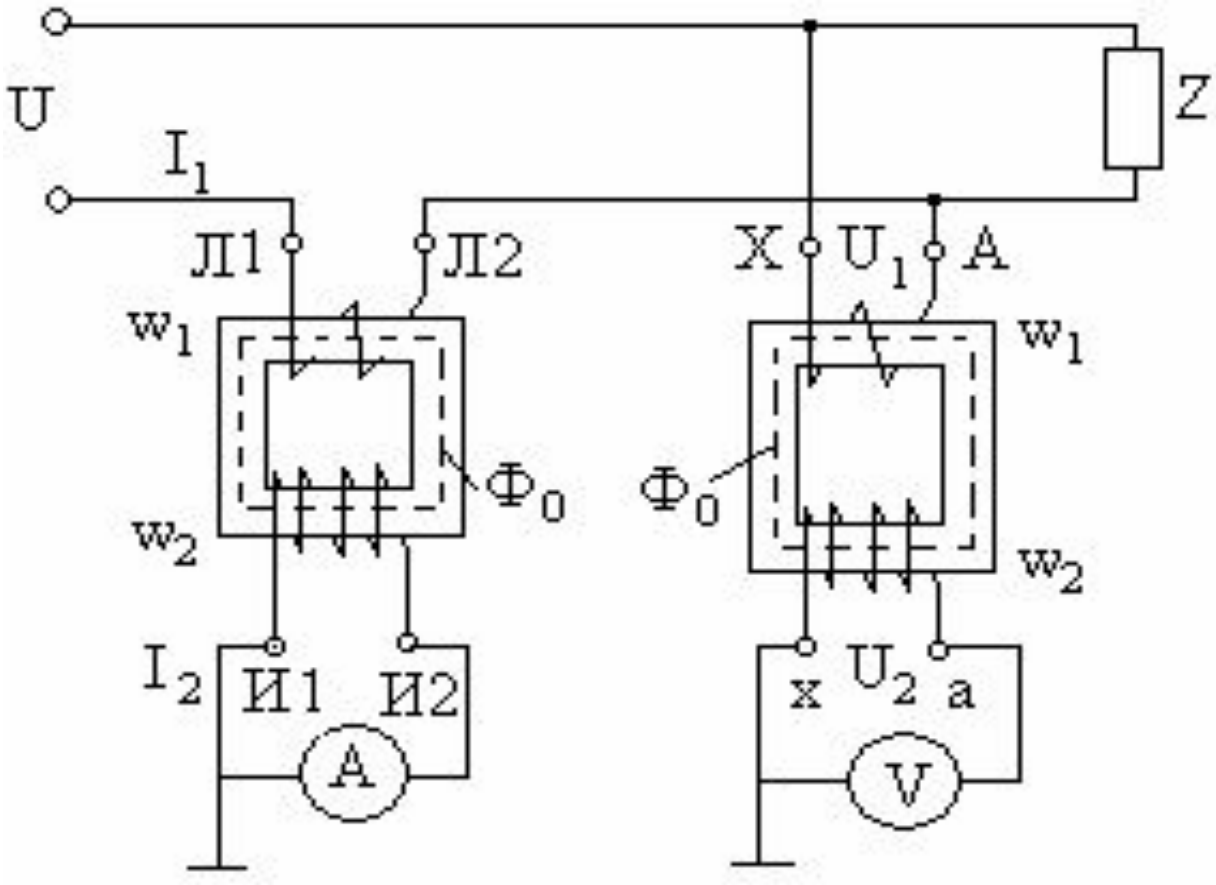

- Измерительные трансформаторы тока и напряжения применяют в качестве преобразователей больших переменных токов и напряжений в относительно малые величины, измерение которых возможно стандартными приборами с относительно небольшими пределами измерений.

- secondary windings are rated for 5 A and 1A
- Also 2, 2.5, 10, 20 A
- CT equivalent circuit and its simplification

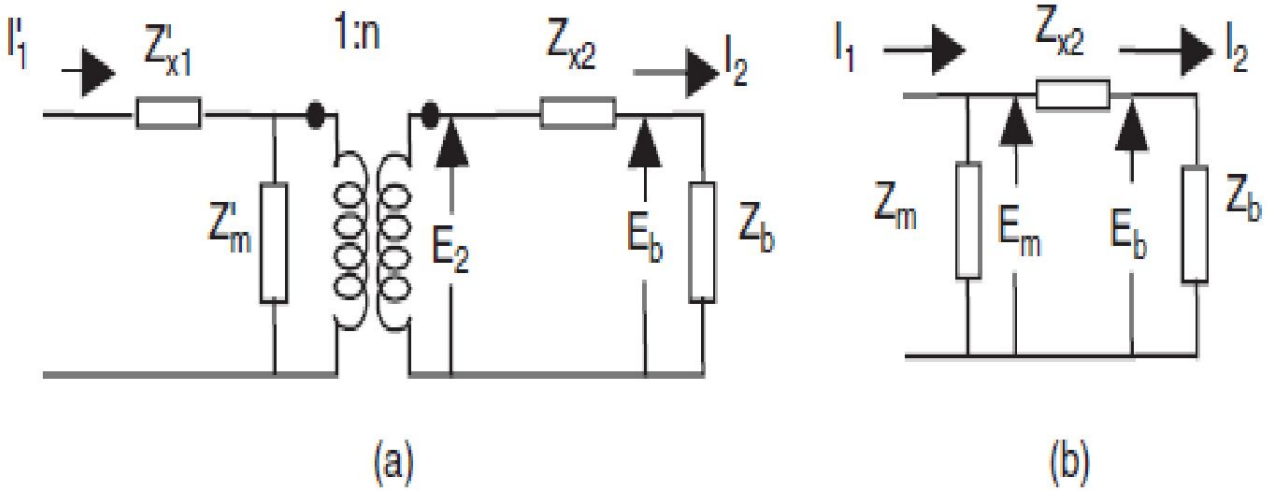

$$I_1 = \frac{I_1'}{n}$$

$$Z_m = n^2 Z_m'$$

- the leakage impedance of the primary winding Zx1 has no effect on the performance of the transformer, and may be omitted.

- The load impedance Zb includes the impedance of all the relays and meters connected in the secondary winding

• CT phasor diagram

- the voltage Em across the magnetizing impedance Zm is given by
- $$Em = Eb + Zx2I2$$
- The magnetizing current Im is given by
- $$Im = Em / Zm$$
- The primary current I1 (referred to the secondary winding) is given by

$$I1 = I2 + Im$$

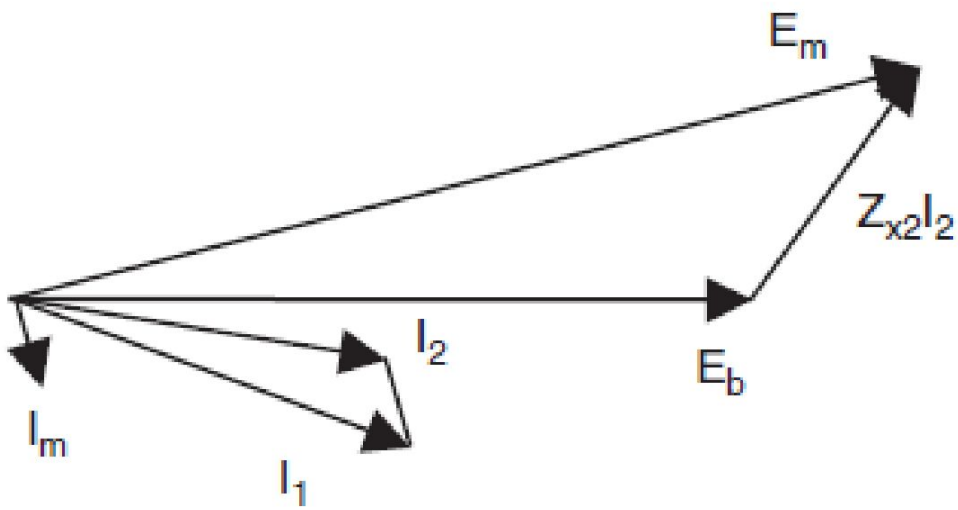

- The per unit current transformation error defined by

$$\varepsilon = \frac{I_1 - I_2}{I_1} = \frac{I_m}{I_1}$$

- The ratio correction factor R is defined as the constant by which the name plate turns ratio n of a current transformer must be multiplied to obtain the effective turns ratio

$$R = \frac{1}{1 - \varepsilon}$$

- Although $\in$ and R are complex numbers

Example

- Consider a current transformer with a turns ratio of 500 : 5, a secondary leakage impedance of (0.01+j0.1) and a resistive burden of 2.0 . If the magnetizing impedance is (4.0+j15) , then for a primary current (referred to the secondary) of Il, find the error and the correction factor.

- Since the magnetizing branch of a practical transformer is nonlinear, Zm is not constant, and the actual excitation characteristic of the transformer must be taken into account in determining the factor R for a given situation.

- The magnetizing characteristic of a typical CT is shown in this Figure

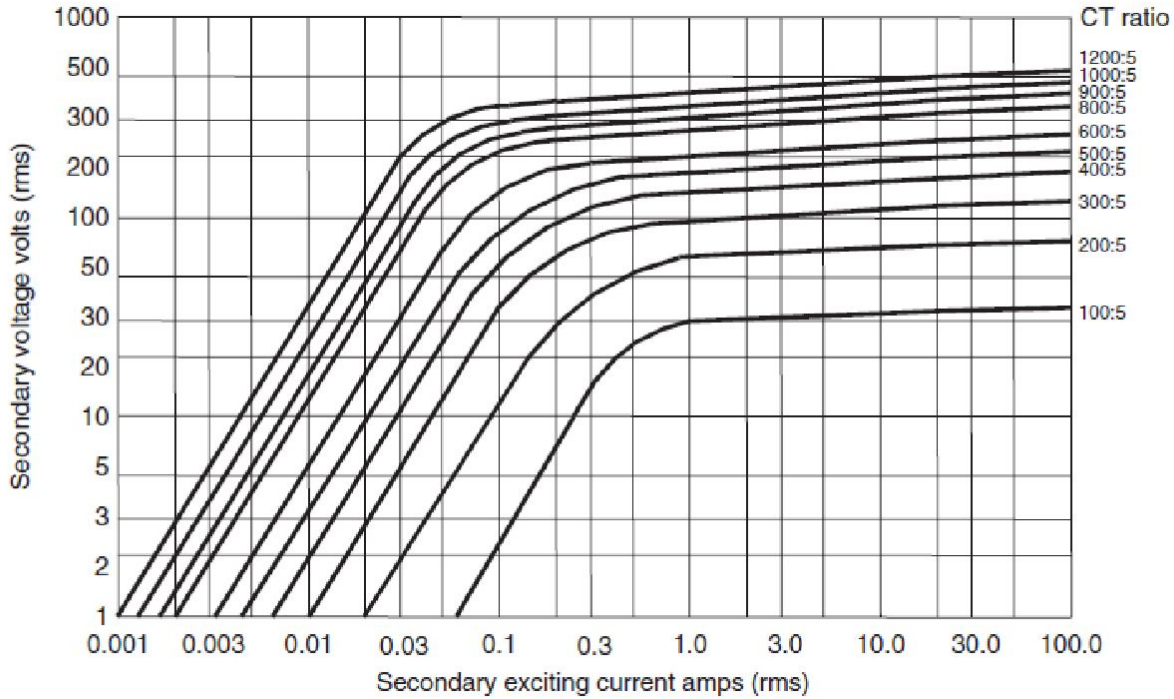

- This being a plot of the r.m.s. magnetizing current versus the r.m.s. secondary voltage, Im for each Em must be obtained from this curve, and then used in equations to calculate the ratio correction factor

Из анализа полученных уравнений можно сделать следующие выводы:

- При возрастании сопротивления вторичной обмотки или ее разрыве (I_2=0) происходит возрастание МДС $I_m w_1$ до $I_1 W_1$, это в свою очередь вызывает резкое увеличение потока Φ_m, сопровождающееся

а) ростом потерь в сердечнике и его перегрев,

б)ростом ЭДС *E2*, что может вызвать аварийную ситуацию пробоя

- Увеличение сопротивления нагрузки вторичной цепи, например, за счет включения большого числа приборов, приводит к росту I_m и тем самым к росту токовой и угловой погрешностей. I_m будет тем меньше, чем выше магнитная проницаемость сердечника и чем меньше магнитные потери, а также при уменьшении индукции до ~0,05-0,15 Тл
- Увеличение индуктивного сопротивления нагрузки приводит к увеличению угла и следовательно к увеличению токовой погрешности и уменьшению угловой погрешности.

Polarity markings on CT windings

- Example

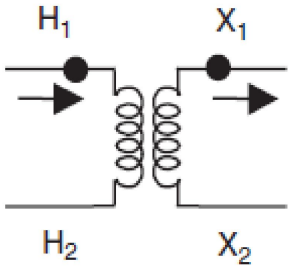

- Consider the CTs shown in Figures (a) and (b) If the primary current is 1000 A, and the two CT ratios are 1000 : 5 and 1000 : 5 respectively, the current in the burden impedance ZL is 10 A Figure (a)
- If the CT secondaries are connected as shown in Figure (b), the burden current becomes zero.

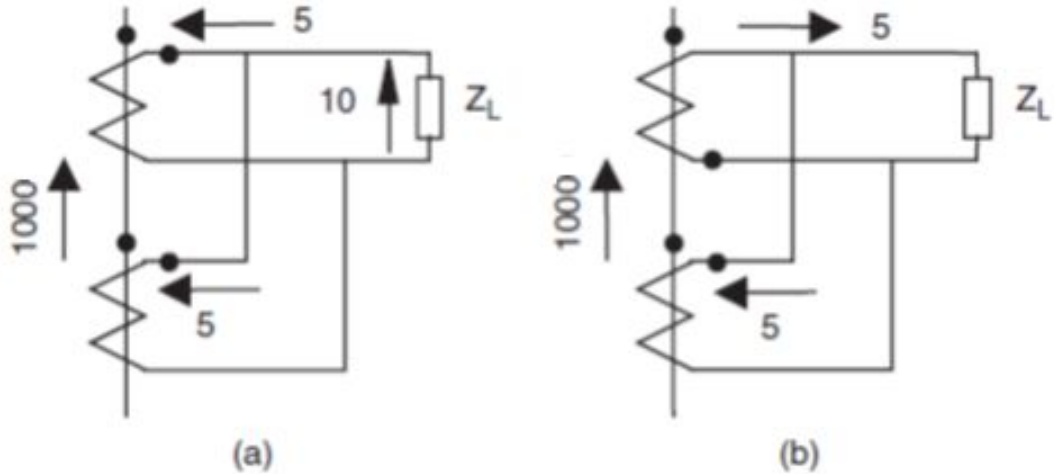

Wye and delta connections In three-phase circuits, it is often necessary to connect the CT secondaries in wye or delta connections to obtain certain phase shifts and magnitude changes between the CT secondary currents and those required by the relays connected to the CTs.

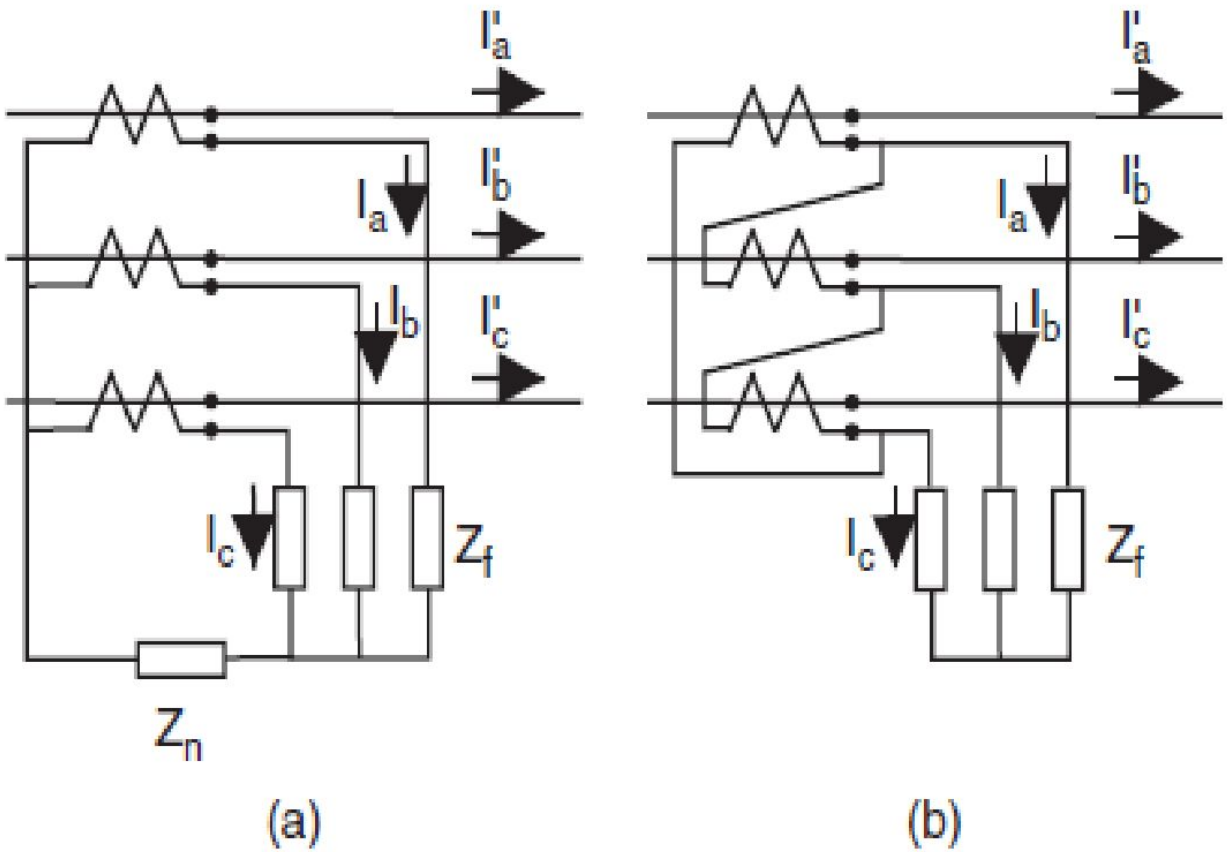

- Consider the CT connections shown in Figure The wye connection shown in Figure (a) produces currents proportional to phase currents in the phase burdens Zf and a current proportional to 3Io in the neutral burden Zn. No phase shifts are introduced by this connection.
- The delta connection shown in Figure (b) produces currents proportional to (Ia −Ib), (Ib −Ic) and (Ic −Ia) in the three burdens Zf. If the primary currents are balanced, $(Ia - Ib) = \sqrt{3}|Ia|\exp(j\pi/6)$, and a phase shift of 30◦ is introduced between the primary currents and the currents supplied to the burdens Zf. By reversing the direction of the delta windings, a phase shift of −30◦ can be obtained.

Principle of the magneto-optic current transformer (MOCT)

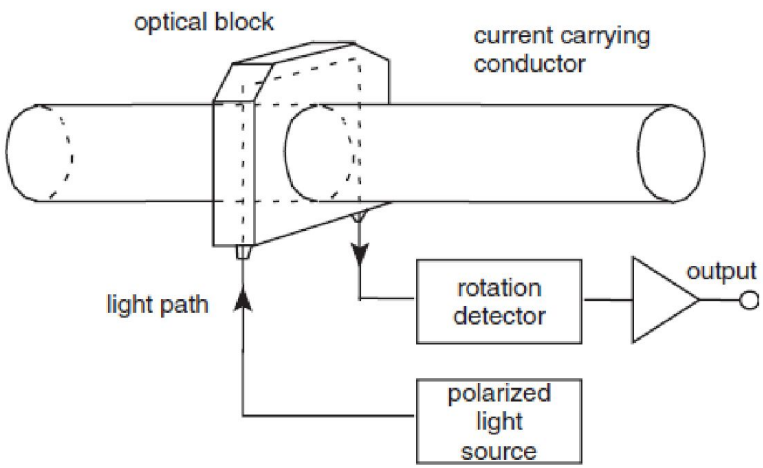

Most of the practical electronic CTs are based upon the relationship between the magnetizing field produced by a current-carrying conductor and the plane of polarization of polarized light passing through a fiber-optic block placed around the conductor. In some designs, a fiber-optic cable goes around the conductor (making several turns as necessary). The angle through which the plane of polarization of the light rotates is detected at the receiving end

- This angular shift is electronically converted to a voltage, which is proportional to the instantaneous value of the magnetizing force around the current-carrying conductor, and hence to the instantaneous value of the current. This voltage may then be suitably amplified and filtered to provide a replica of the current in the primary conductor. Alternatively, the voltage may be sampled at a suitable rate to provide a sampled-data representation of the primary current. It should be clear that such an electronic CT is most suited to relays and meters which can utilize low-power signals, or sampled data of the signals. As will be seen later, this type of signal source is particularly suited for electronic relays and computer relays. Electronic CTs are linear, and have a very wide dynamic range, i.e. they are able to measure accurately currents at light loads as well as those corresponding to very heavy faults.

Voltage transformers

- Voltage transformers – also known as potential transformers – are normal transformers with the primary winding connected directly to the high-voltage apparatus, and with one or more secondary windings rated at the standard voltage of 69.3 V for phase-to-neutral voltages or 120 V for phase to-phase voltages.
- Their performance, equivalent circuit and phasor diagrams are similar to those of a power transformer. The error of transformation of such a transformer is negligible for all practical purposes in its entire operating range – from zero to about 110% of its normal rating. We may consider such transformers to be error-free from the point of view of relaying. Voltage transformers are rather expensive, especially at extra high voltages: 345 kV or above. Consequently, they are usually found on low-, medium- and high-voltage systems. At extra high voltages, capacitive

- Are the more usual sources for relaying and metering.
- In passing, we may mention a possible problem with voltage transformers when used on ungrounded (or high-impedance grounded) power systems. As shown in the Figure,

when a ground fault occurs on such a system, the voltage transformers connected to the unfaulted phases are subjected to a voltage equal to the phase-to-phase voltage of the power system. This usually drives one of the transformers well into saturation, and, because of the excessive magnetizing current drawn by this transformer, may blow the protective fuse.

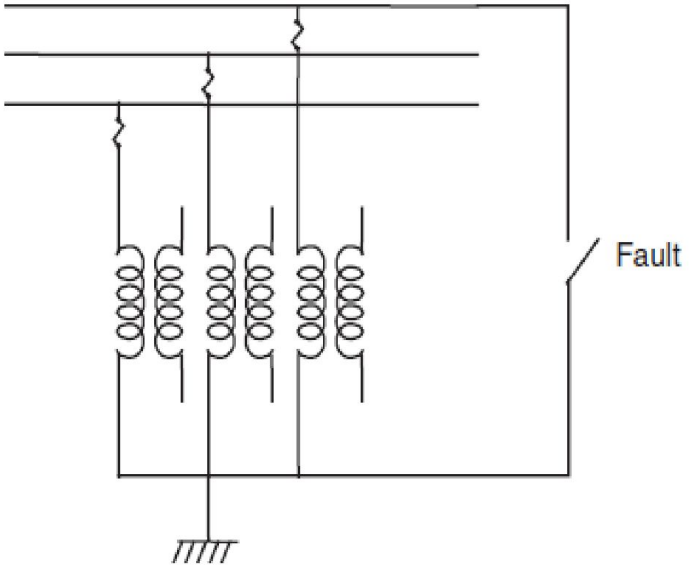

Coupling capacitor voltage transformers CCVT Connections and equivalent circuit

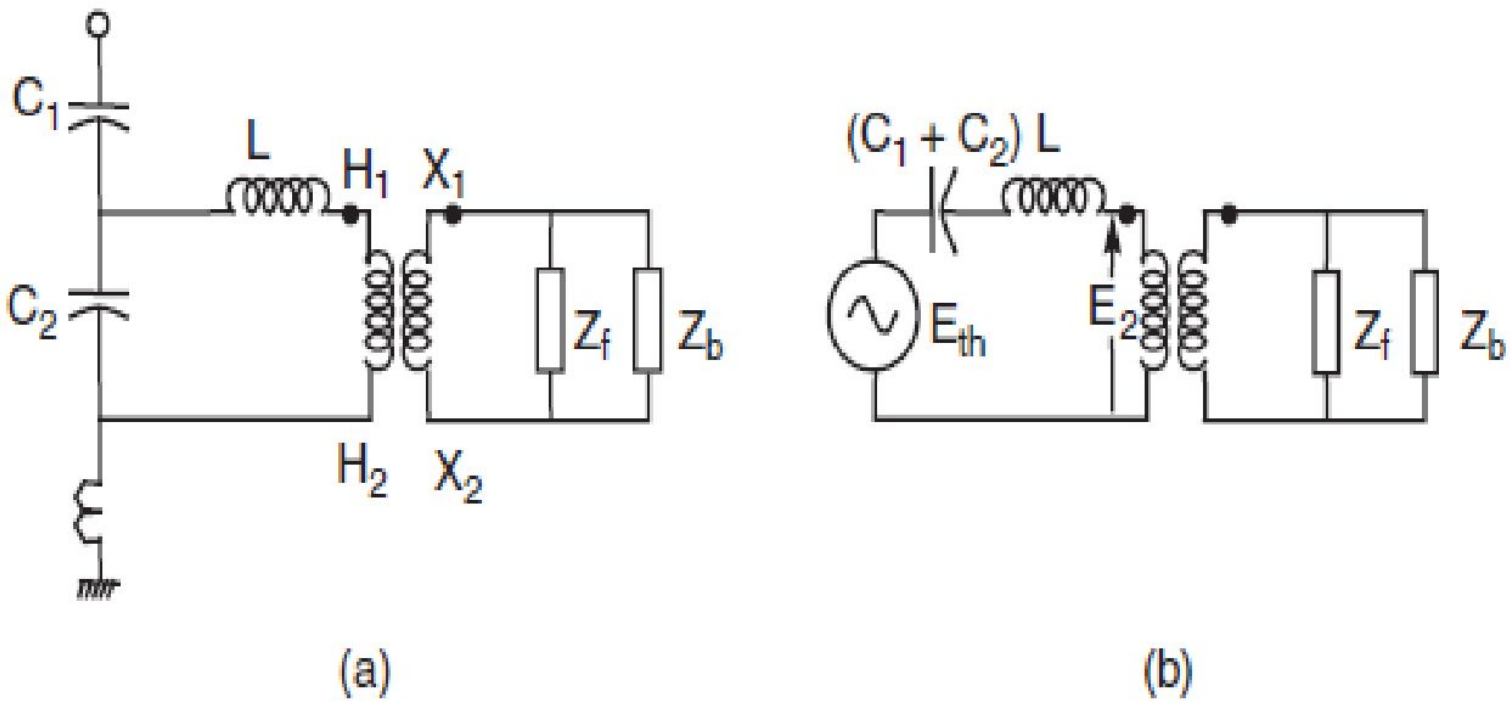

- The Thevenin voltage is given by

$$E_{th} = E_{pri} C_1 / (C_1 + C_2)$$

- and the Thevenin source impedance is a capacitance of (C1 +C2)

$$E_2 = E_{th} - I_1 \left[j\omega L + \frac{1}{j\omega(C_1 + C_2)} \right]$$

- Since the Thevenin impedance of a CCVT is capacitive, the nonlinear magnetizing branch of the connected transformer may give rise to Ferro resonant oscillations, especially under light loads.
- Zf, is usually provided to damp these oscillations.