# Amkodor Forwarder Proposal v.2.1

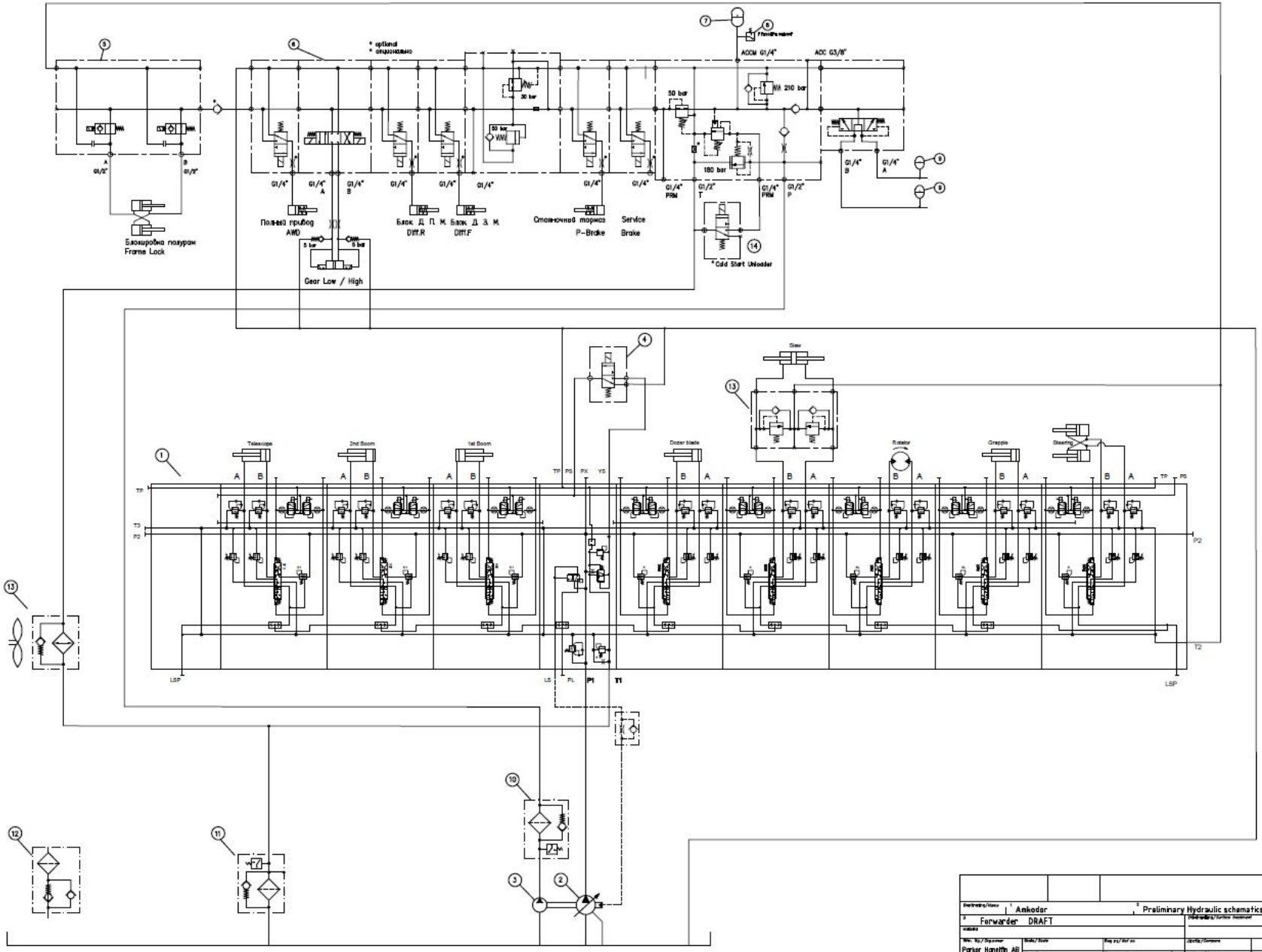
Nominell mått
Nominal size
Avvikt
Deviation
* optional
* опционально
ACCM G1/4"
ACC G3/8"
210 bar
50 bar
30 bar
180 bar
Блокировка полурам
Frame Lock
Полный привод
AWD
Gear Low / High
Блок. Д. П. М.
Diff.R
Блок. Д. З. М.
Diff.F
Стояночный тормоз
P-Brake
Service
Brake
* Cold Start Unloader
Telescope
2nd Boom
1st Boom
Dozer blade
Rotator
Grapple
Steering
Slew
TP
T3
P2
LSP
LS
PL
P1
T1
T2
PS
PX
YS
Forwarder DRAFT
Preliminary Hydraulic schematics
Parker Hannifin AB
Global Mobile Systems
Borås
SB
2020.12.09
GMS 20-18

# Proposed solutions main components

- FV-5407 combination valve
  - K220LS-03-054508-01 : 1’st Boom, 2’nd Boom, Telescope
  - L90LS-05-050680-02 : Dozer Blade, Slew, Rotator, Grapple, Steering
- Manifold e3771979
  - Frame lock
- Manifold auxiliary functions, e3771977
  - Gear Low/high
  - AWD = All wheel drive
  - Diff.R = Differential lock rear
  - Diff.F = Differential lock front
  - P-Brake = Parking brake
  - S-Brake = Service brake, to lock when standing still
  - Accumulator charge
  - Brake accumulator supply control

- Return line filter
- Air breather filter
- Pressure line filter if needed
- P2-145cc LS pump
- Fixed gear pump

- (IQAN control system, at a later stage in the project)
- (Crimped, low cost piston accumulators (=non reparable similar to bladder))

# Mid Inlet - Copy Spool, Tank Counter Pressure

### [P20] Copy spool

The load signal system consists of a number of shuttle valves, which compare the load signals from different work sections and any signal received from a subsequent valve connected to the LSP port [P31]. The highest load signal is sent to the pump via the connection PL in the inlet section, or to a copy spool if the section has one. The copied load signal can then be tapped from the LS port.

/ Housing not machined for copy spool.

**KS** Inlet section with copy spool.

The load signal acts on a copy spool, which sends a copied load signal to the LS connection.

The system permits a certain consumption in the load signal line to the pump regulator, without the load signal being influenced, since the copied load signal in LS is supplied with oil from the pump channel instead of taking oil from a workport.

In addition, the system prevents disruptive micro-dipping of the load during the initial stage of the lifting phase.

LS = Copied load signal
– the oil is taken from the pump.

PL = Uncopied load signal
– the oil is taken from the workport.

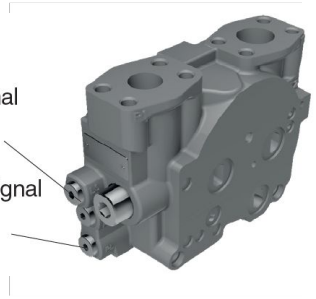

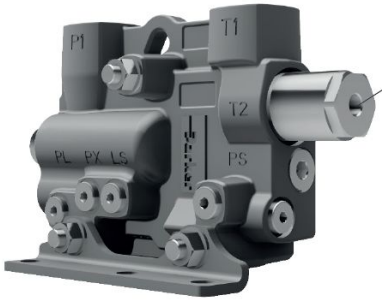


### [P24] Tank connection T2

Can either be used as a tank connection or fitted with a counter pressure valve.
The counter pressure valve increases the pressure in the valve's tank gallery. By raising the counter pressure level the anti-cavitation characteristics of the K220LS is improved still further. Good characteristics eliminate the risk of cavitation and reduce the risk of damage to the cylinder seals. The characteristic are important for functions in which a lowering movement changes to a lifting movement without a time delay. For example, when an implement is lowered and then pressed down into the ground, or when a machine turns on sloping ground.

**T2** Tank connection T2 open.

**T2B** Tank connection T2 plugged.

**MF5** Counter pressure valve preset to give 5 bar counter pressure at a flow of 20 l/min.

# Work section K220LS & L90LS

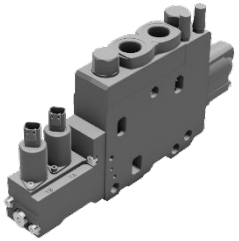

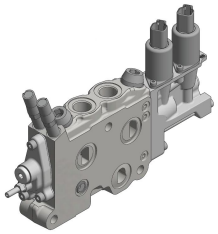

- Many spool functions
  Function adapted spools.
- Force feedback
  Eliminates instability when activating loads with high inertia
- Feed-reducing valve
  Individual setting of maximum pressure in each work port.
- Port relief valve
  Protects valve work port and consumer from pressure peaks.
- Pressure compensator
  Maintains same speed no matter what load and pump pressure.
- Pilot solenoids
  without manual over ride, AMP connector

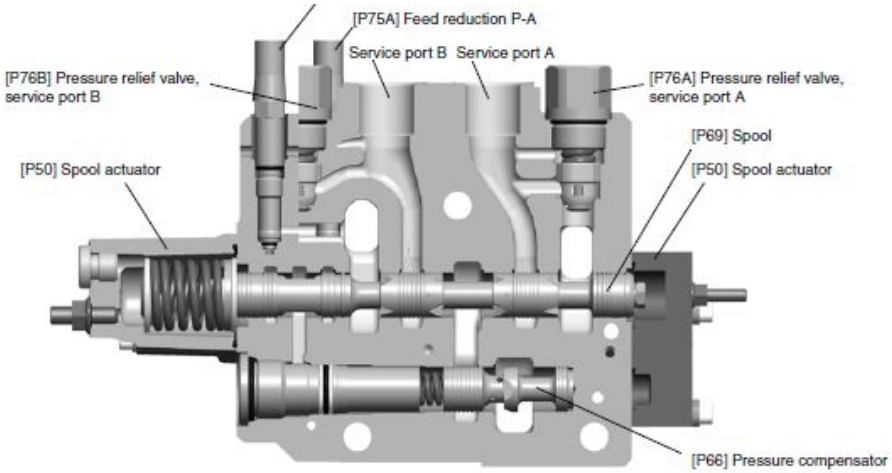


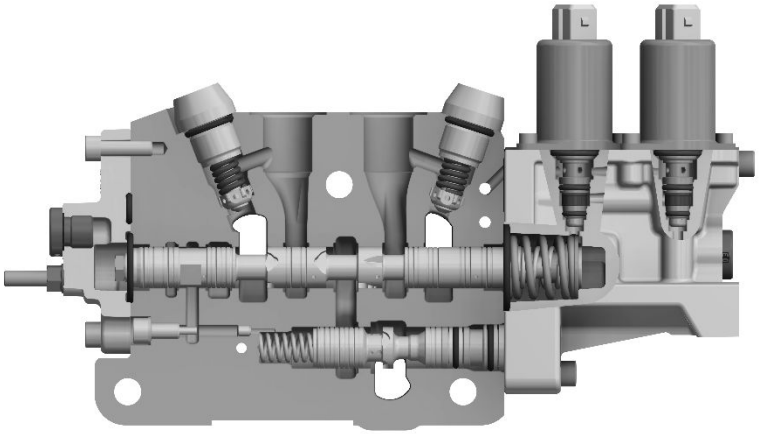

# Crane valve – K220LS / L90LS

**1st Boom**

Single acting spool on to save energy and improve simultaneous operation by reducing needed pump flow.

Pressure feedback to give outstanding controllability with acceleration control.

**2nd Boom and Telescope**

Regenerative spools to improve simultaneous operation by reducing required pump flow (enables other functions to run faster).

Telescope – verify that the port relief and LS limiting pressures are correct.

# L90LS Dozer Blade

- Consider using a load holding valve.

- L90LS  D-spool, work port relief 230 bar, 30cSt, 50 degC nominal leakage:

  25 cm^3/min @ 100 bar

  45 cm^3/min @ 200 bar

# L90LS Steering Solutions

**Conventional Orbitrol System**

**Joystick steering Parallel with steering Orbitrol**

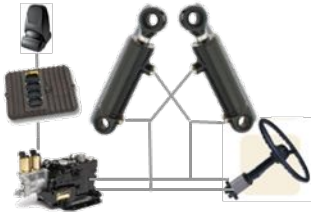

**Flow amplifying series with steering pilot Orbitrol**

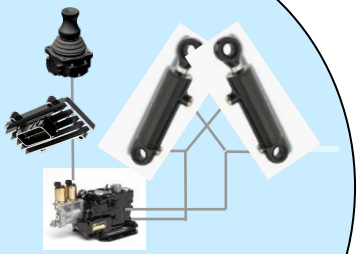

**Full Steer-by-Wire**
**Stop in case of fault**

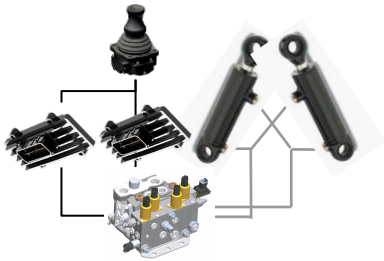

**Full Steer-by-Wire**
**Maintain steering in case of fault**

# Steering

- A standard L90 work section in this proposal. Consider using additional equipment to fullfil high enough level of safety.

- Parker has launched the SBW110 valve that facilitates fulfilment of
  ISO11850 Machinery for Forestry,
  ISO5010 Wheeled Machines-Steering

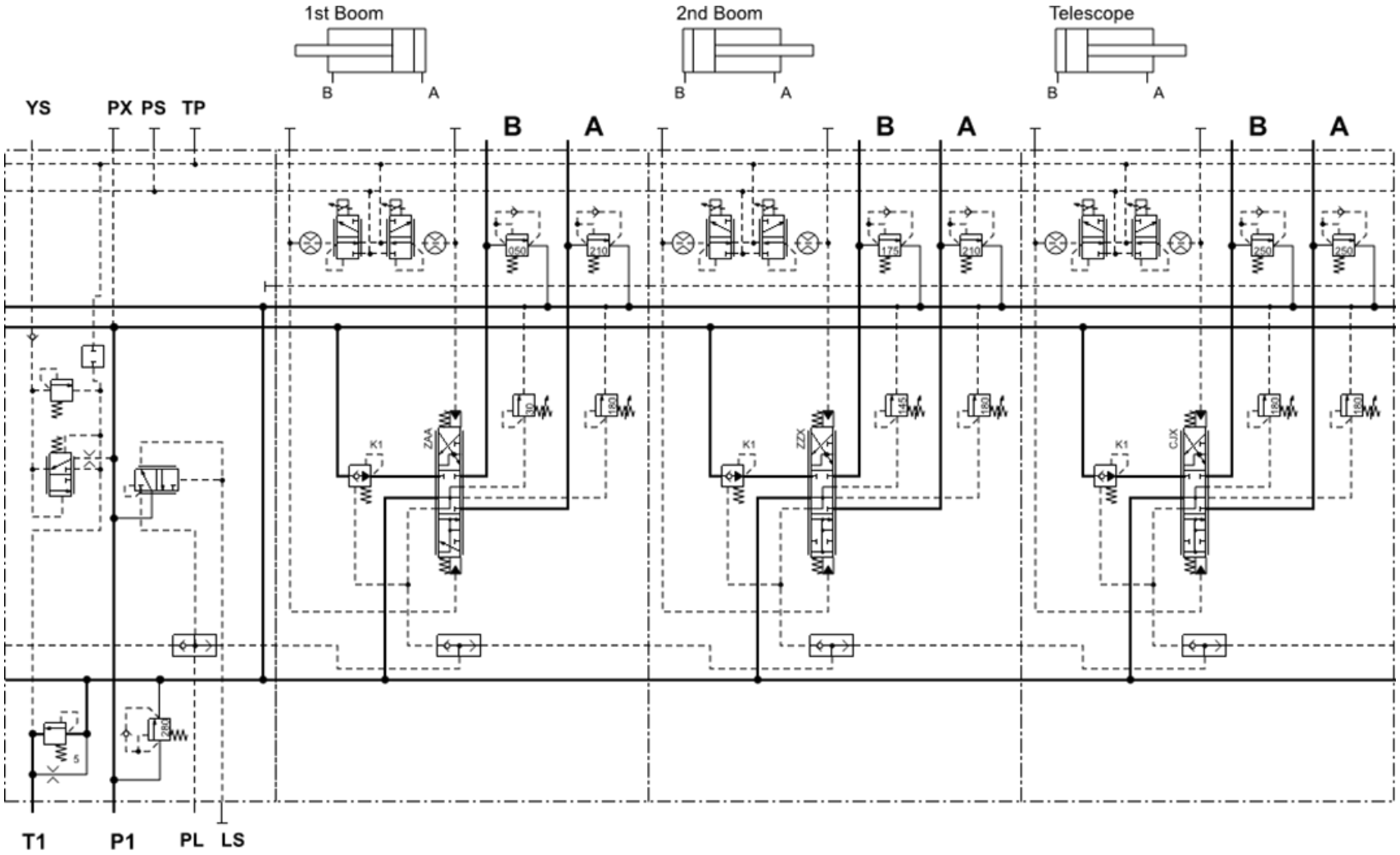
1st Boom
2nd Boom
Telescope
B
A
YS
PX
PS
TP
K1
ZAA
ZZX
CJX
T1
P1
PL
LS

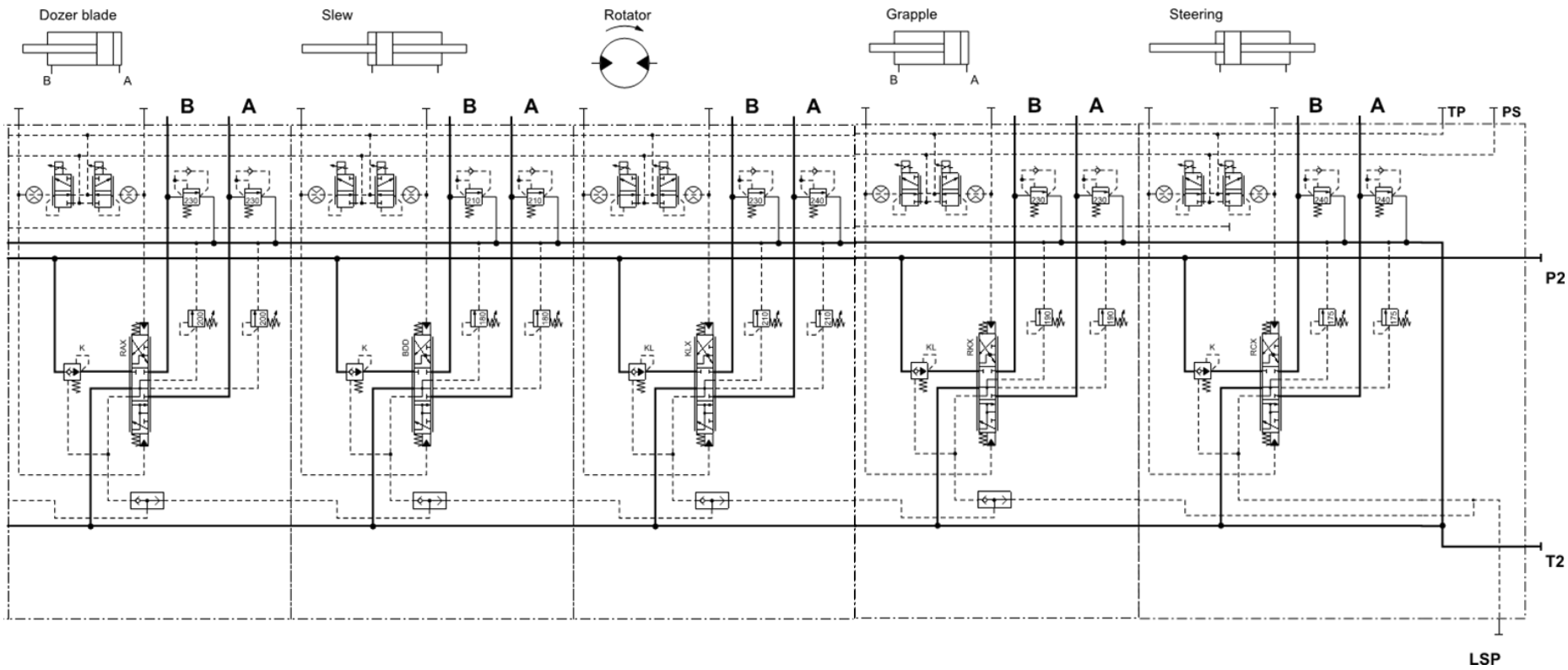
Dozer blade
Slew
Rotator
Grapple
Steering
B
A
TP
PS
P2
T2
LSP

Section 1: 1st Boom
Section 2: 2nd Boom
Section 3: Telescope

| Pos | Label | 1 | 2 | 3 |
|---|---|---|---|---|
| **Spool and Compensator Data** | | | | |
| P60 | Spool function | D2 | CBT | CB |
| P69 | Spool with code | ZAA | ZZX | CJX |
| P66 | Compensator with code | K1 | K1 | K1 |
| **Indata Cylinder** | | | | |
| S28 | Cylinder diameter | 110 | 110 | |
| S29 | Rod diameter | 70 | 56 | |
| S30 | Number of cylinders | 1 | 1 | |
| S31 | Area ratio | 0.6 | 0.74 | |
| S32 | Stroke length | 688 | 790 | |
| S33 | Stroke time + | 4 | 7 | |
| S34 | Stroke time - | 4 | 7 | |
| **Indata Motor** | | | | |
| S60 | Displacement | | | |
| S61 | Volume efficiency | | | |
| S62 | Gear ratio | | | |
| S63 | Requested rotation speed CW | | | |
| S64 | Requested rotation speed CCW | | | |
| **Requested flow** | | | | |
| P61A | Required flow port A | 98 | 64 | |
| P61B | Required flow port B | 58 | 48 | |
| **Calculated Flow** | | | | |
| P62 | Work port for + flow | A+ | B+ | B+ |
| P71A | Calculated flow from workport A | 121 | 91 | 76 |
| P71B | Calculated flow from workport B | 24 | 166 | 137 |
| P72 | Flow limitation | / | / | / |
| P72A | Max flow from workport A | | | |
| P72B | Max flow from workport B | | | |
| S40 | Calculated stroke time extension + | 3.2 | 2.7 | |
| S41 | Calculated stroke time extension - | 9.9 | 3.7 | |
| S42 | Calculated rotation speed CW | | | |
| S43 | Calculated rotation speed CCW | | | |

**P45 Machine Function**
Section 1: Dozer blade
Section 2: Slew
Section 3: Rotator
Section 4: Grapple
Section 5: Steering

| Pos | Label | 1 | 2 | 3 | 4 | 5 |
|---|---|---|---|---|---|---|
| **How to Connect Workports** | | | | | | |
| P62 | Work port for + flow | A+ | A+ | A+ | A+ | A+ |
| **Spool and Compensator Data** | | | | | | |
| P60 | Spool function | D | DS | D | D | D |
| P69 | Spool with code | RAX | BDD | KLX | RKX | RCX |
| P66 | Compensator with code | K | K | KL | KL | K |
| **Indata Cylinder** | | | | | | |
| S28 | Cylinder diameter | 100 | 100 | | 90 | 100 |
| S29 | Rod diameter | 50 | 60 | | 50 | 56 |
| S30 | Number of cylinders | 2 | 2 | | 1 | 2 |
| S31 | Area ratio | 0.75 | 1 | | 0.69 | 1 |
| S32 | Stroke length | 400 | 620 | | 243 | 400 |
| S33 | Stroke time + | 4 | 6 | | 1.5 | 6 |
| S34 | Stroke time - | 4 | 6 | | 1.5 | 6 |
| **Requested flow** | | | | | | |
| P61A | Required flow port A | 94 | 62 | | 62 | 63 |
| P61B | Required flow port B | 71 | 62 | | 43 | 43 |
| **Calculated Flow** | | | | | | |
| P71A | Calculated flow from workport A | 94 | 73 | 14 | 81 | 95 |
| P71B | Calculated flow from workport B | 95 | 71 | 14 | 78 | 91 |
| P72 | Flow limitation | / | / | / | / | / |
| P72A | Max flow from workport A | | | | | |
| P72B | Max flow from workport B | | | | | |
| S40 | Calculated stroke time extension + | | | | | 2.7 |
| S41 | Calculated stroke time extension - | | | | | 2.8 |
| S42 | Calculated rotation speed CW | | | | | |
| S43 | Calculated rotation speed CCW | | | | | |

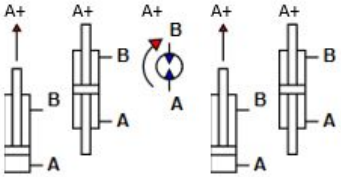

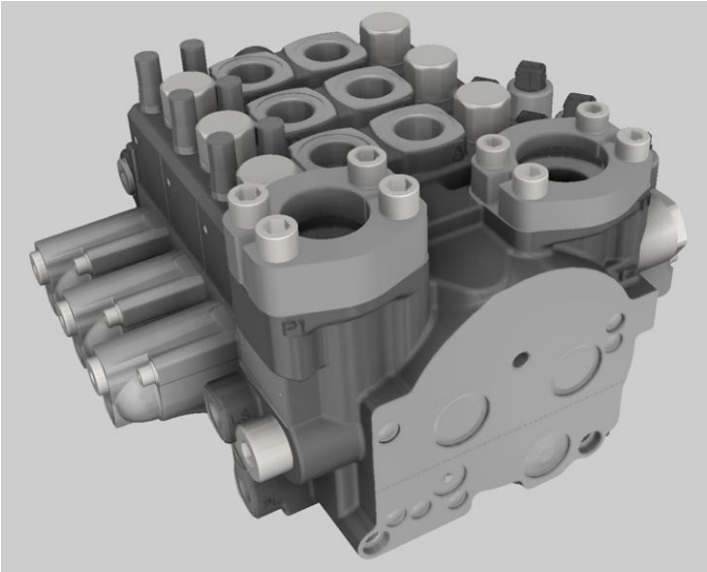
P1

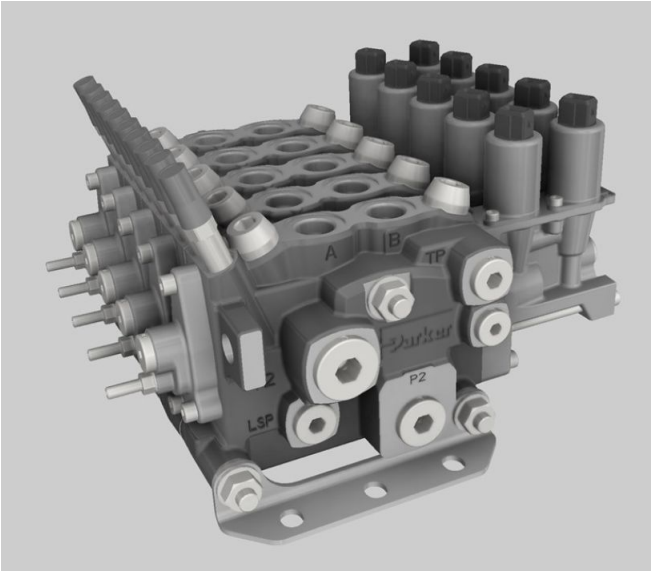
A
B
TP
Z
LSP
P2

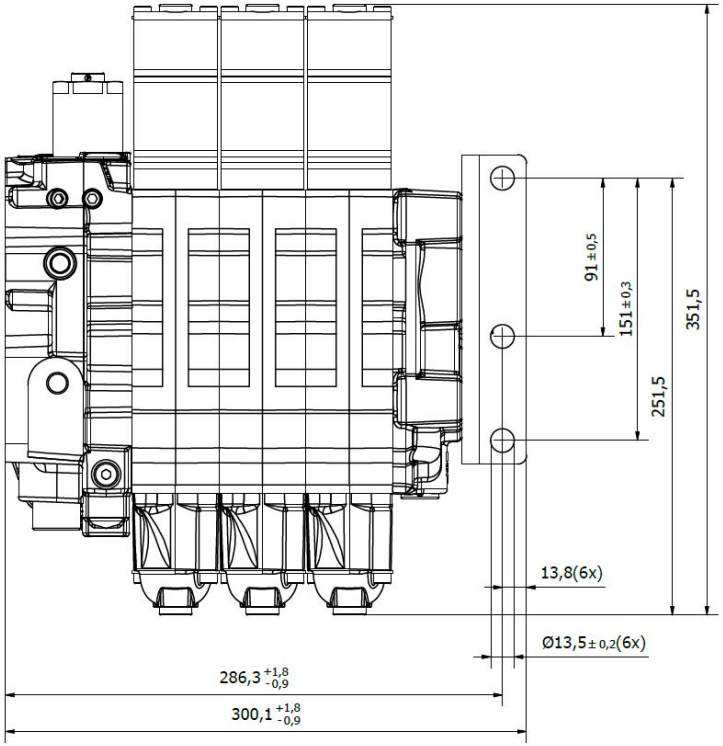
91 ±0,5
151 ±0,3
251,5
351,5
13,8(6x)
Ø13,5± 0,2(6x)
286,3 +1,8 -0,9
300,1 +1,8 -0,9

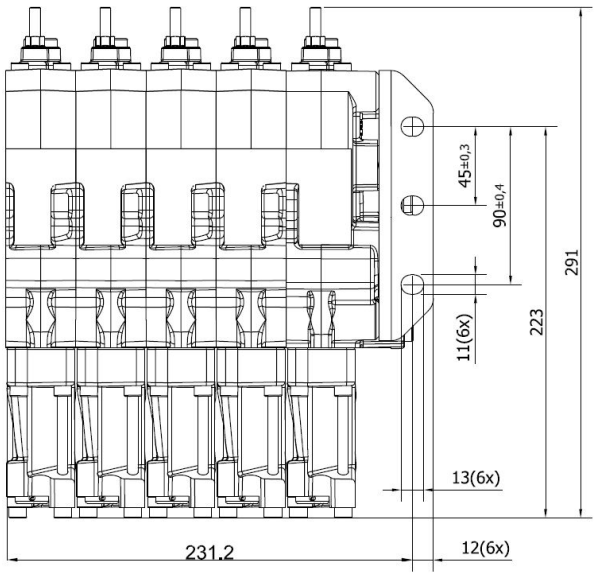
45±0,3
90±0,4
291
223
11(6x)
13(6x)
231,2
12(6x)

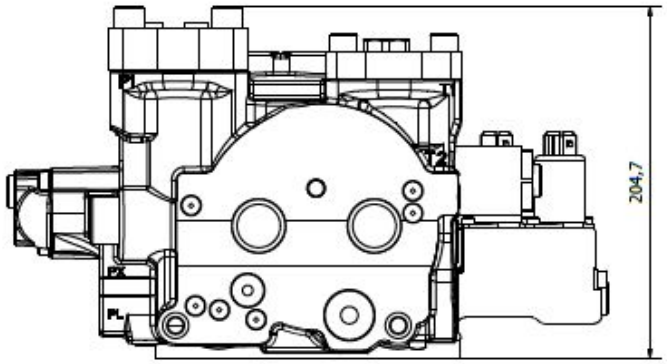
204,7

# Pilot Pressure Blocking

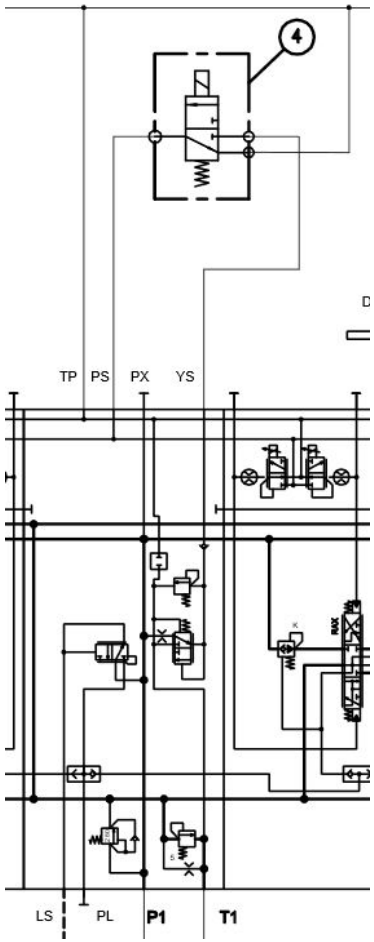


Inlet section specified for external loop of the pilot pressure

Cartridge
DSH083B
Coil
CCP024A
Body
B08-3 6B

# Slew Cross-Over Valve

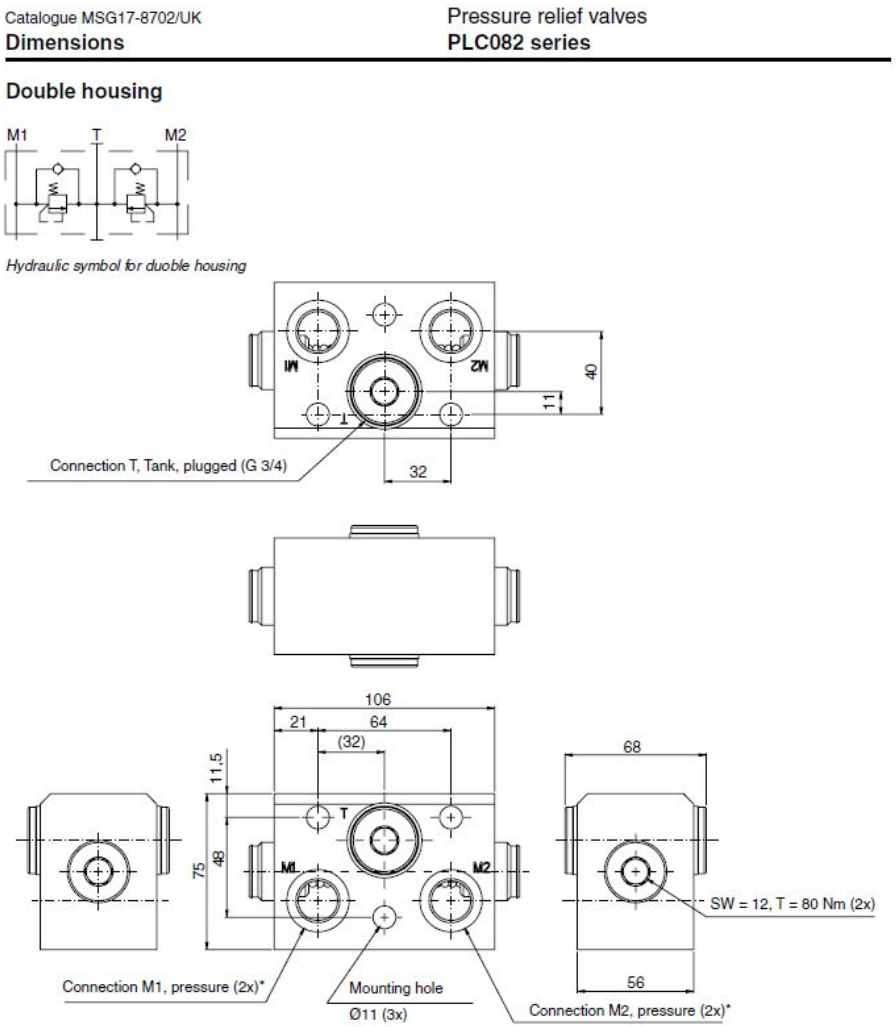


For optimised back filling of cavitating cylinder at deceleration and pressure relieves.

Separate connection to the L90 T2 port to utalise the 5 bar back pressure in the FV-valve tank gallery.

L90 work port to have check valves instead of relief-anti-cav valves.

# Auxiliary Manifold

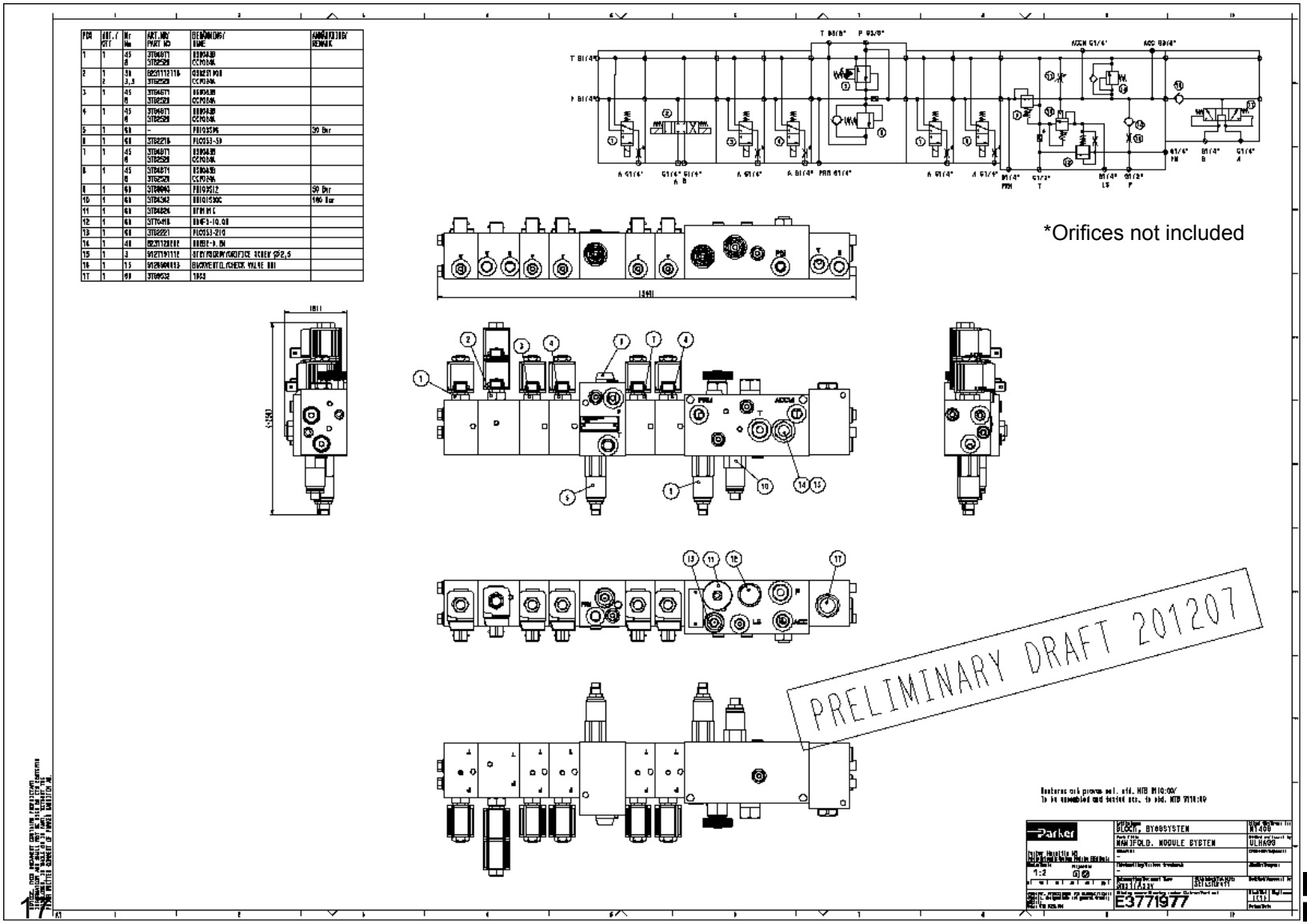


Parker

# Auxiliary Manifold, e3771977

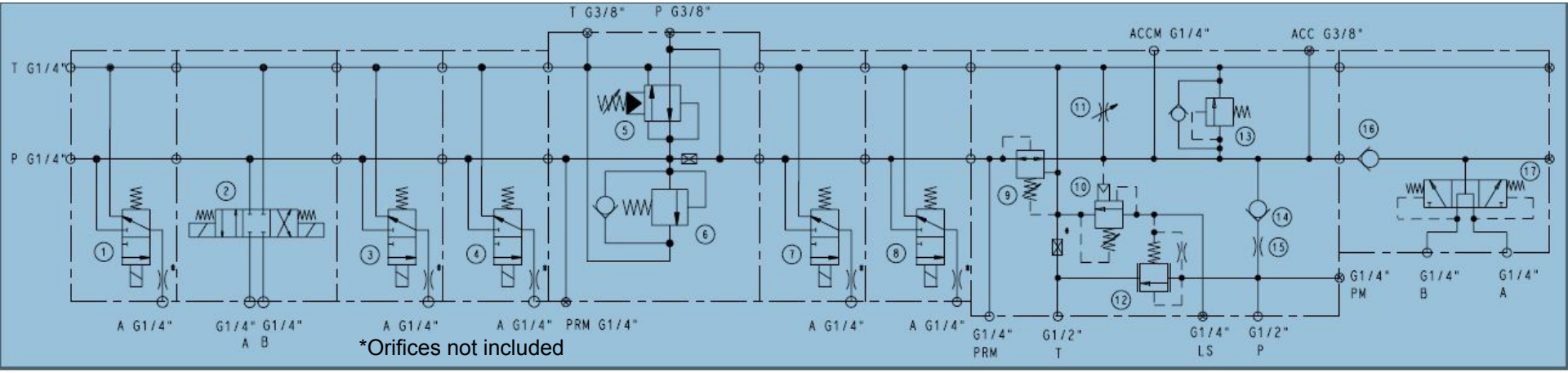


| POS | ANT./ QTY | Mv Nm | ART.NR/ PART NO | BENÄMNING/ NAME | ANMÄRKNING/ REMARK |
|---|---|---|---|---|---|
| 1 | 1 | 45<br>8 | 3764671<br>3762520 | DSH083B<br>CCP024A | |
| 2 | 1<br>2 | 30<br>3,5 | 8231112718<br>3762520 | GS025100N<br>CCP024A | |
| 3 | 1 | 45<br>8 | 3764671<br>3762520 | DSH083B<br>CCP024A | |
| 4 | 1 | 45<br>8 | 3764671<br>3762520 | DSH083B<br>CCP024A | |
| 5 | 1 | 60 | - | PR103S06 | 30 Bar |
| 6 | 1 | 60 | 3762218 | PLC053-50 | |
| 7 | 1 | 45<br>8 | 3764671<br>3762520 | DSH083B<br>CCP024A | |
| 8 | 1 | 45<br>8 | 3764671<br>3762520 | DSH083B<br>CCP024A | |
| 9 | 1 | 60 | 3768993 | PR103S12 | 50 Bar |
| 10 | 1 | 60 | 3764362 | RU101S30C | 180 Bar |
| 11 | 1 | 60 | 3766624 | NVH101K | |
| 12 | 1 | 60 | 3770418 | R04F3-10.0N | |
| 13 | 1 | 60 | 3762227 | PLC053-210 | |
| 14 | 1 | 40 | 8231120282 | D02B2-0.2N | |
| 15 | 1 | 3 | 9127197112 | STRYPSKRUV/ORIFICE SCREW ∅2,5 | |
| 16 | 1 | 15 | 9126900693 | BACKVENTIL/CHECK VALVE RB1 | |
| 17 | 1 | 60 | 3769532 | 10S5 | |

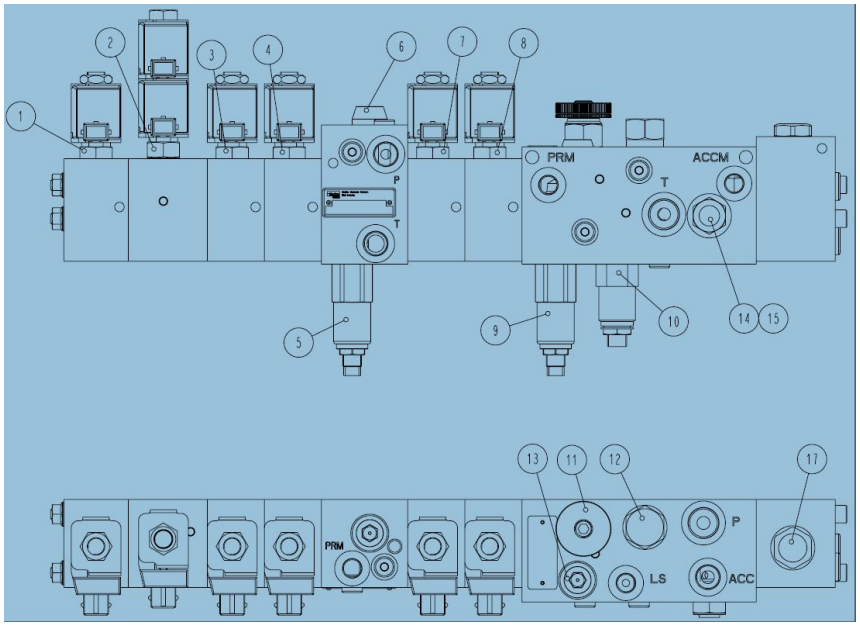

# Auxiliary Manifold, e3771977

Catalog HY15-3502-R/US
**Technical Information**

Spool Type Logic Valve
**Series R04F3**

## General Description

Spool Type , Normally Closed, Vent to Open Logic Element. For additional information see Technical Tips on pages LE1-LE6.

## Features

- High flow capacity
- Used as high flow switching or metering element
- Can be used as main stage for a pilot operated relief or sequence valve
- Integral 250 micron pilot flow filter
- Various switching pressures available
- 1:1 pilot pressure ratio
- Hardened working parts for maximum durability
- All external parts zinc plated

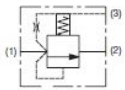


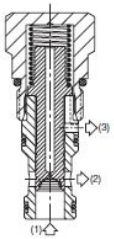


## Performance Curve (Through cartridge only)

**Vented Open Pressure Drop vs. Flow 1 to 2**

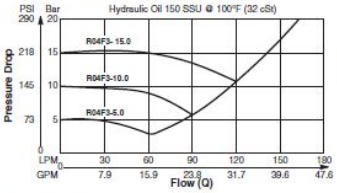


## Dimensions Millimeters (Inches)

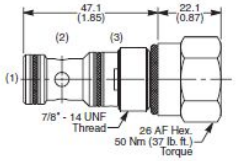


## Specifications

| | |
|---|---|
| **Rated Flow** | 170 LPM (45 GPM) |
| **Nominal Flow @ 7 Bar (100 PSI)** | 100 LPM (26 GPM) |
| **Maximum Inlet Pressure** | 420 Bar (6000 PSI) |
| **Leakage @ 150 SSU (32 cst)** | 50 ml/min. @ 100 Bar (1450 PSI) |
| **Switching Press.** | See ordering information |
| **Cartridge Material** | All parts steel. All operating parts hardened steel. |
| **Operating Temp. Range/Seals** | -34°C to +121°C (Nitrile) (-30°F to +250°F) -26°C to +204°C (Fluorocarbon) (-15°F to +400°F) |
| **Fluid Compatibility/ Viscosity** | Mineral-based or synthetic with lubricating properties at viscosities of 45 to 2000 SSU (6 to 420 cSt) |
| **Filtration** | ISO-4406 18/16/13, SAE Class 4 |
| **Approx. Weight** | .13 kg (.29 lbs.) |
| **Cavity** | C10-3S (See BC Section for more details) |
| **Form Tool** | Rougher NFT10-3SR Finisher NFT10-3SF |

## Ordering Information

**R04F3** — [ ] [ ]

10 Size Logic Element — Switching Pressure — Seals

| Code | Switching Pressure Non Adjustable Preset |
|---|---|
| **1.0** | 1.0 Bar (14.5 PSI) |
| **5.0** | 5.0 Bar (73 PSI) Std. |
| **10.0** | 10.0 Bar (145 PSI) |
| **15.0** | 15.0 Bar (218 PSI) |
| **20.0** | 20.0 Bar (290 PSI) |

*If no switching pressure is specified, valve will be supplied as R04F3-5.0N*

| Code | Seals / Kit. No. |
|---|---|
| **N** | Nitrile, Buna-N (Std.)/ (SK30504N-1) |
| **V** | Fluorocarbon / (SK30504V-1) |



Catalog HY15-3502-R/US
**Technical Information**

Differential Area Unloading Relief Valve
**Series RU101**



## General Description

Differential Area Unloading Relief Valve. This valve is best suited for low flow accumulator unloading circuits or can be used as remote pilot valves. They provide a fixed percentage between load and unload pressures. For additional information see Technical Tips on pages PC1-PC6.

## Features

- Low hysteresis
- Cartridge design
- All external parts zinc plated

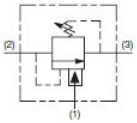


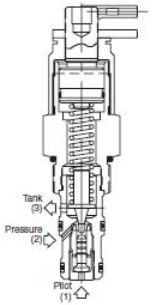


## Specifications

| | |
|---|---|
| **Rated Flow** | 3.75 LPM (1 GPM) |
| **Maximum Pilot Flow** | .94 LPM (.25 GPM) |
| **Maximum Inlet Pressure** | 245 Bar (3500 PSI) |
| **Maximum Pressure Setting** | 210 Bar (3000 PSI) |
| **Maximum Tank Pressure** | 210 Bar (3000 PSI) |
| **Leakage at 150 SSU (32 cSt)** | Port 2 to 3 10 drops/min. (0.66 cc/min.) Port 1 to 2 60 drops/min. (3 cc/min.) |
| **Cartridge Material** | All parts steel. All operating parts hardened steel. |
| **Operating Temp. Range/Seals** | -34°C to +121°C (Nitrile) (-30°F to +250°F) -26°C to +204°C (Fluorocarbon) (-15°F to +400°F) |
| **Fluid Compatibility/ Viscosity** | Mineral-based or synthetic with lubricating properties at viscosities of 45 to 2000 SSU (6 to 420 cSt) |
| **Filtration** | ISO-4406 18/16/13, SAE Class 4 |
| **Approx. Weight** | .23 kg (.50 lbs.) |
| **Cavity** | C10-3 (See BC Section for more details) |
| **Form Tool** | Rougher NFT10-3R Finisher NFT10-3F |

## Performance Curve

**Inlet Flow vs. Pressure Drop**

Without pilot assist (Through cartridge only)

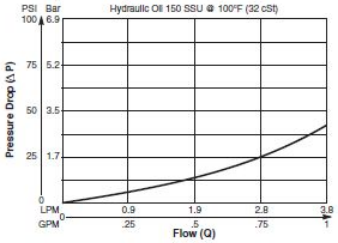

# Auxiliary Manifold Gear Shift

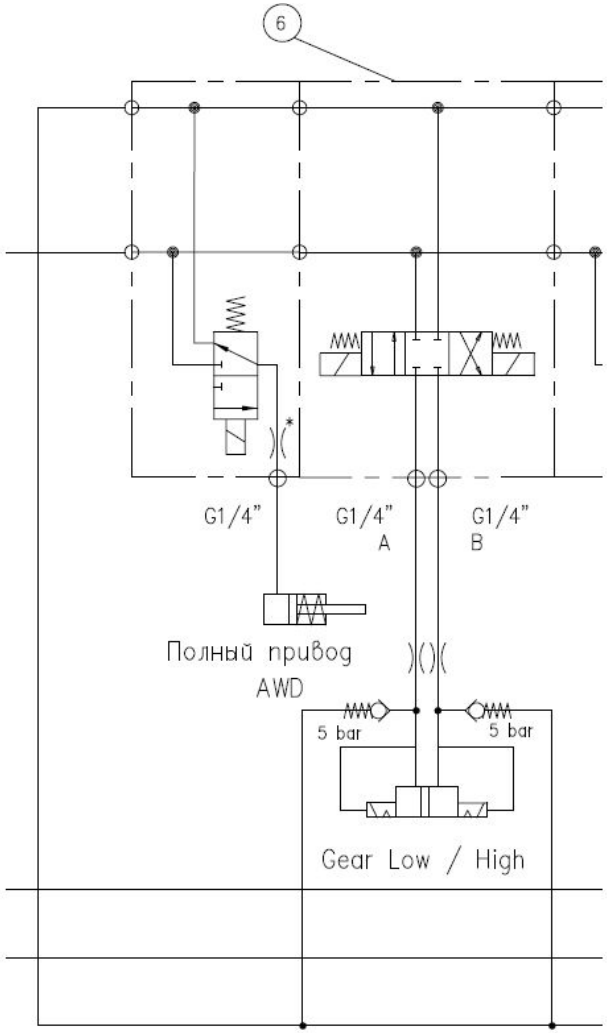


Based on that the gear shifting mechanism have mechanical detent positions.
Shifting gear with a hydraulic puls by momentarily shifting the directional control valve.

Orifices and check valves are line mounted components.
Not included in manifold price.

# Auxiliary Manifold Alternative Supplied by the LS pump

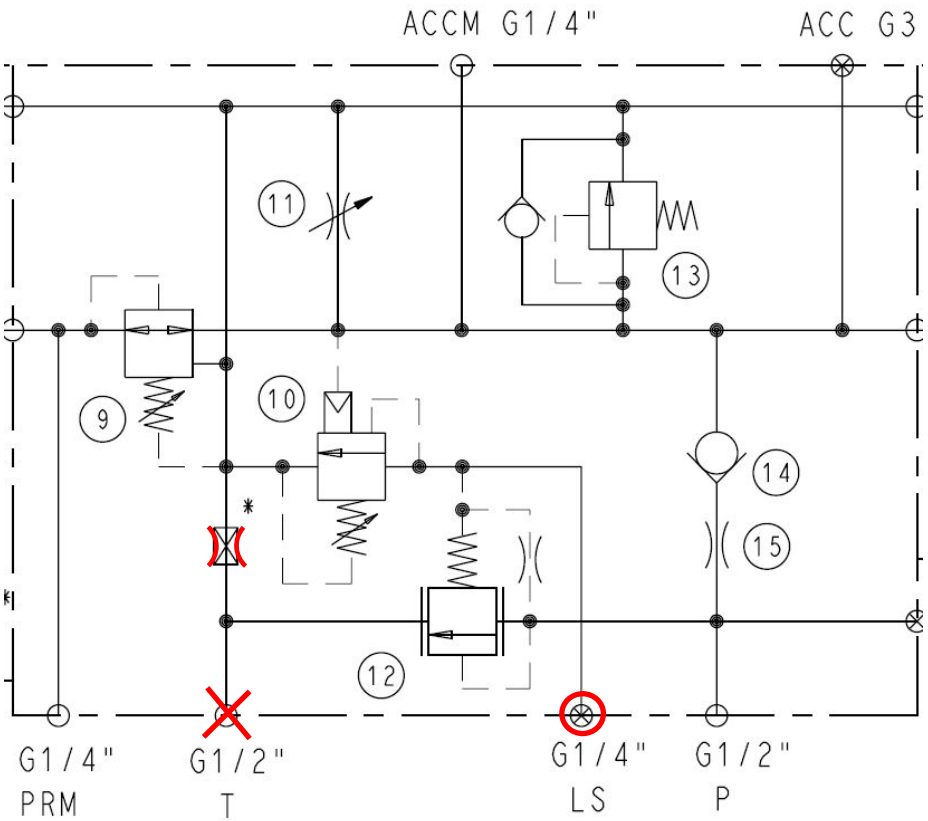


The Auxiliary Manifold can be adapted for LS pump supply.

The ½” T-port is plugged.
An internal plug is replaced by an orfice.

LS port is connected to the pump regulator LS signal line.

BUT! only if max system pressure level allows. If not than a pressur reducing valve is need in the P-line.

Could be useful for test the manifold in an existing machine to verify the functionality.

# Cold Start Unloader

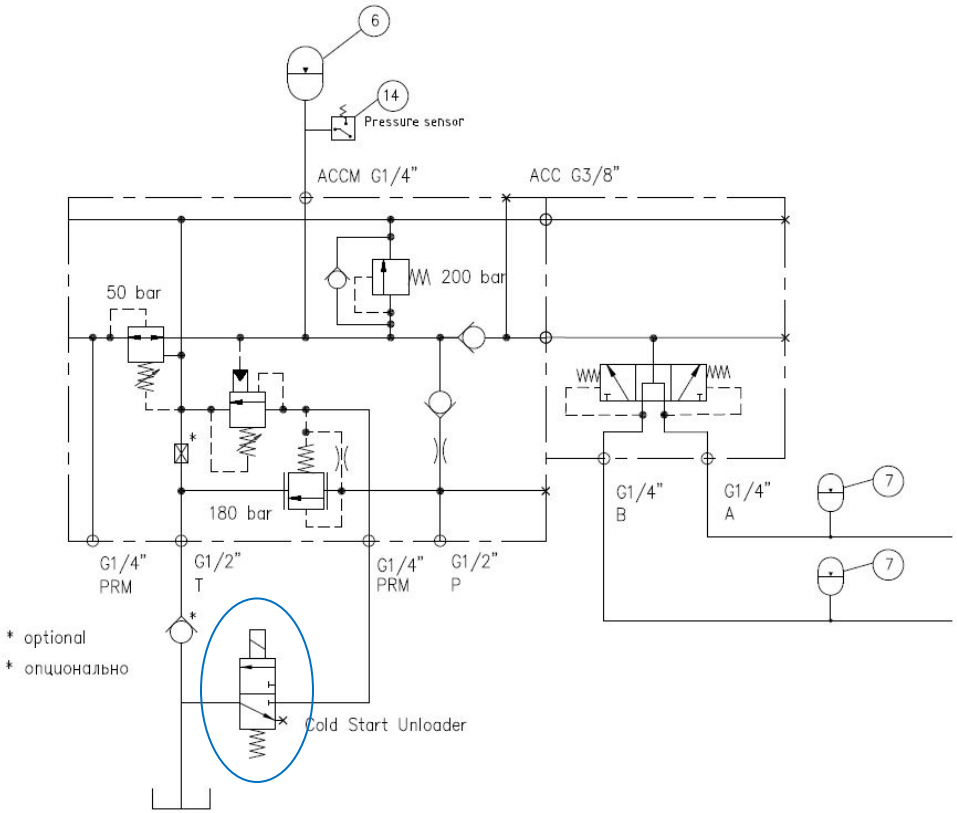


When starting the diesel engine at for example below -20ºC.
The control sysem activates the solenoid valve and drain the pilot signal to the unloader valve.
The valve is activated to be open for 10 seconds until the diesel engine has reached a steady idling speed.

The benefit is to keep the engine start torgue as low as possible and not to discharge the battery too much.

Cartridge
DSH083B
Coil
CCP024A
Body
B08-3 6B

# Frame Lock, e3771979

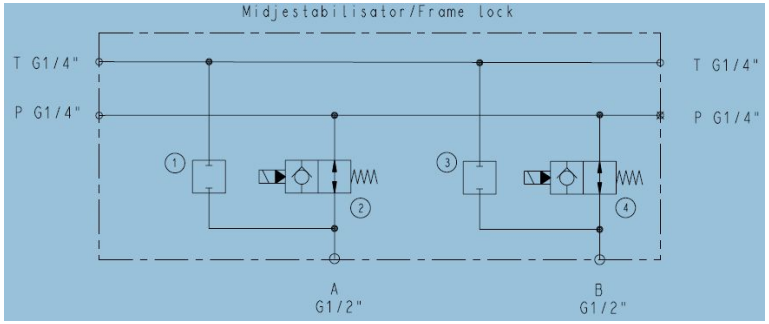


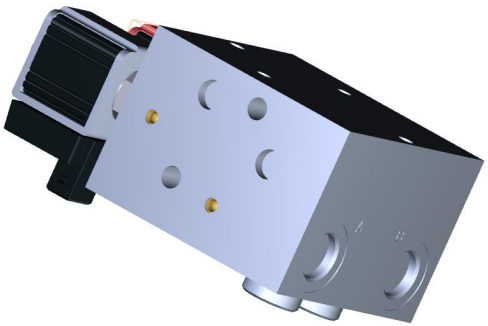

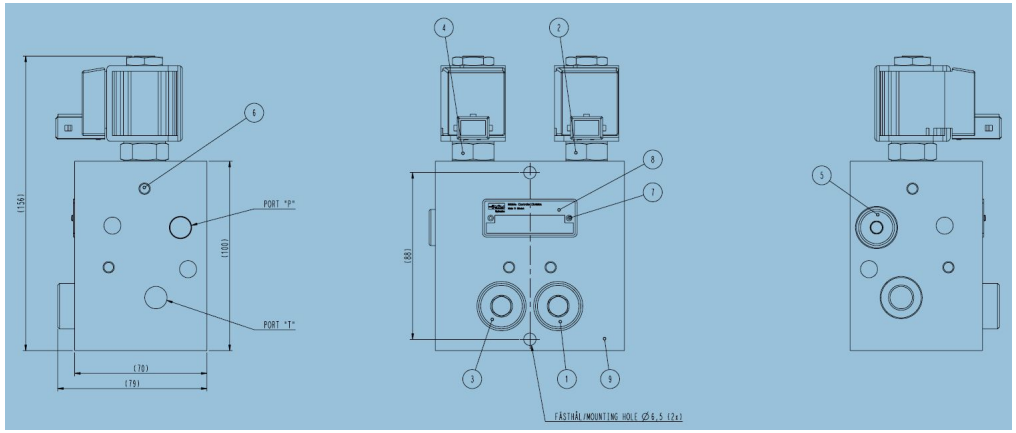


| POS | ANT./ QTY | Mv Nm | ART.NR/ PART NO | BENÄMNING/ NAME |
|---|---|---|---|---|
| 1 | 1 | 60 | 3762158 | PLUGG/PLUG PLC053 |
| 2 | 1 | 45<br>8 | 3766315<br>3762520 | DSH081NR<br>CCP024A |
| 3 | 1 | 60 | 3762158 | PLUGG/PLUG PLC053 |
| 4 | 1 | 45<br>8 | 3766315<br>3762520 | DSH081NR<br>CCP024A |
| 5 | 1 | 30 | 376910202 | PLUGG/PLUG G1/4" |
| 6 | 10 | - | 91259599 | EXP. MB 800-060 |
| 7 | 2 | - | 91257701 | SKRUV/SCREW |
| 8 | 1 | - | 91283219 | SKYLT/PLATE |
| 9 | 1 | - | 3764466 | BLOCKHUS/MANIFOLD HOUSING |

# Frame Lock

Dynamic
pressure peaks ?

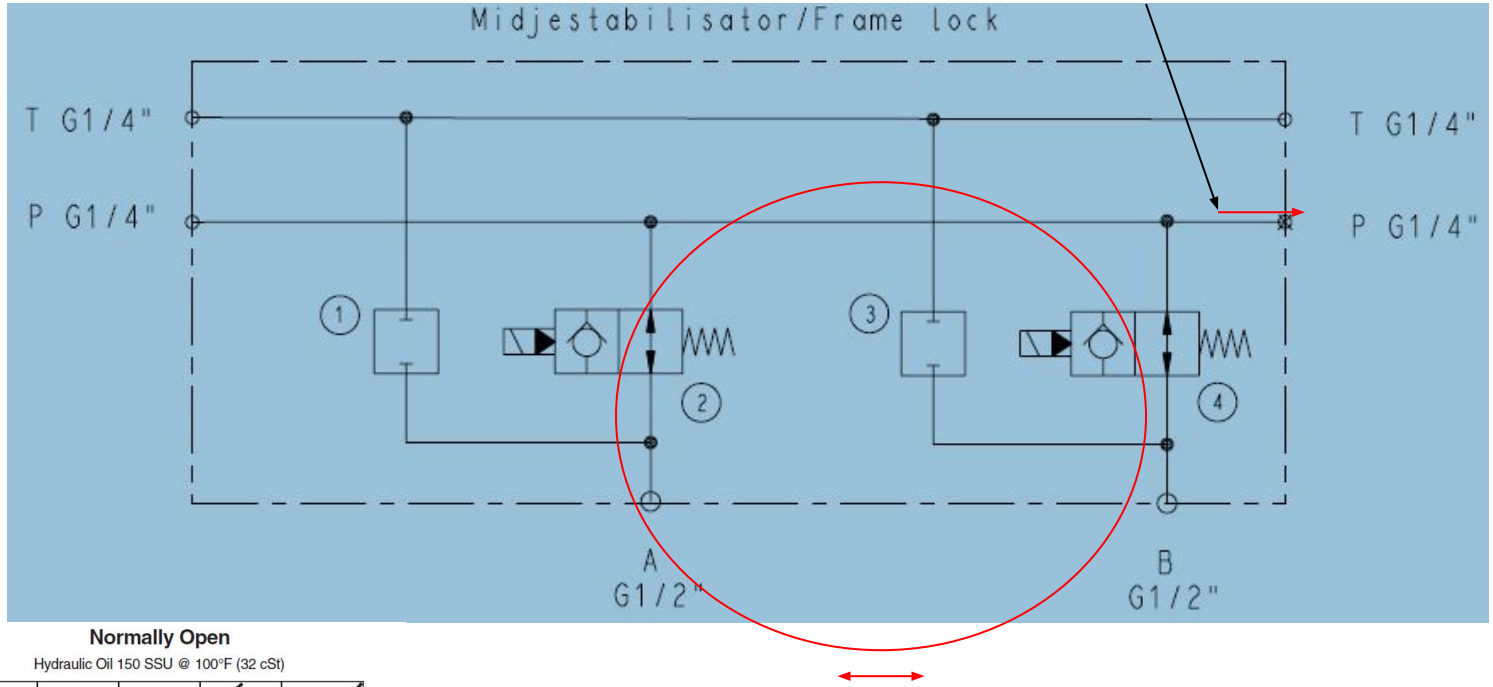


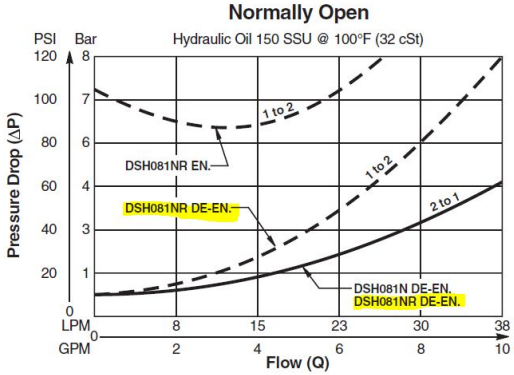

# Frame Lock alternatives

Dynamic pressure peaks ?
Check valve up stream.

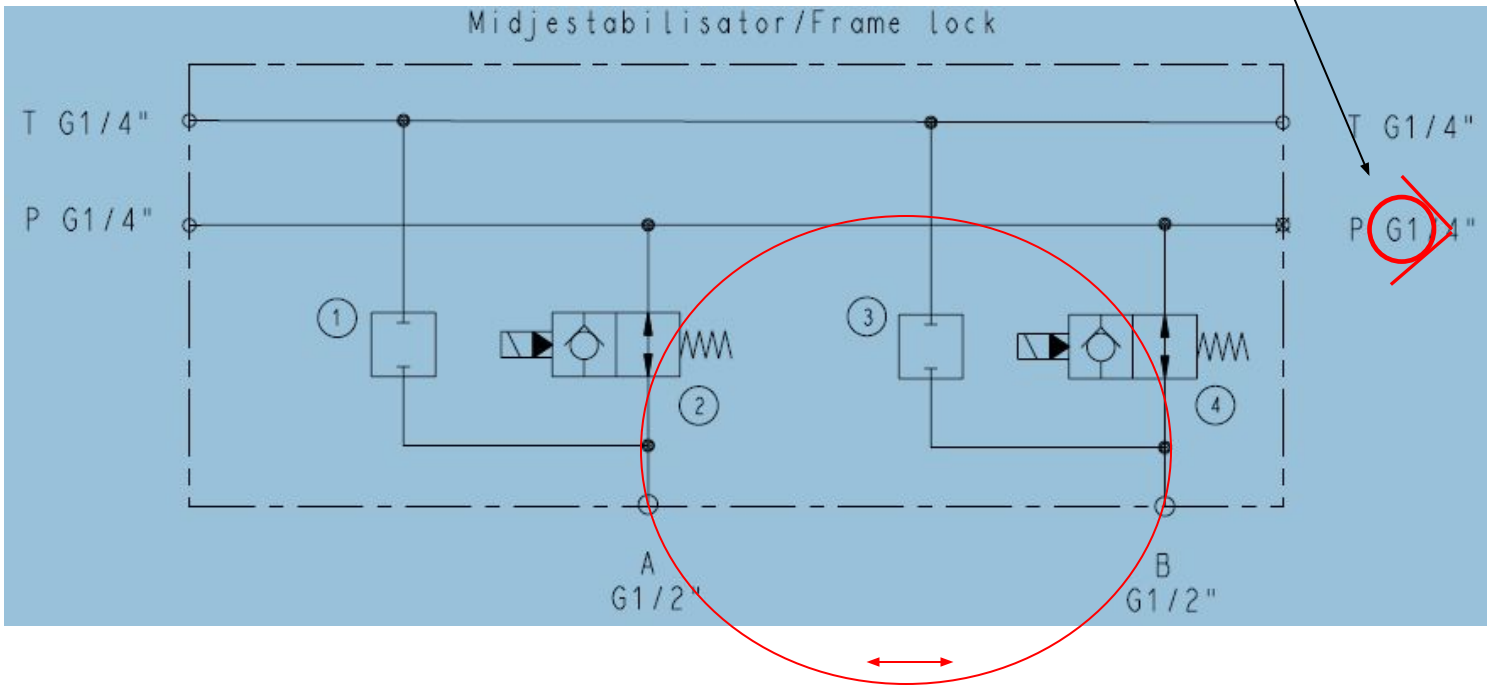

# Frame Lock alternatives

Dynamic pressure peaks ?
Check valve up stream.

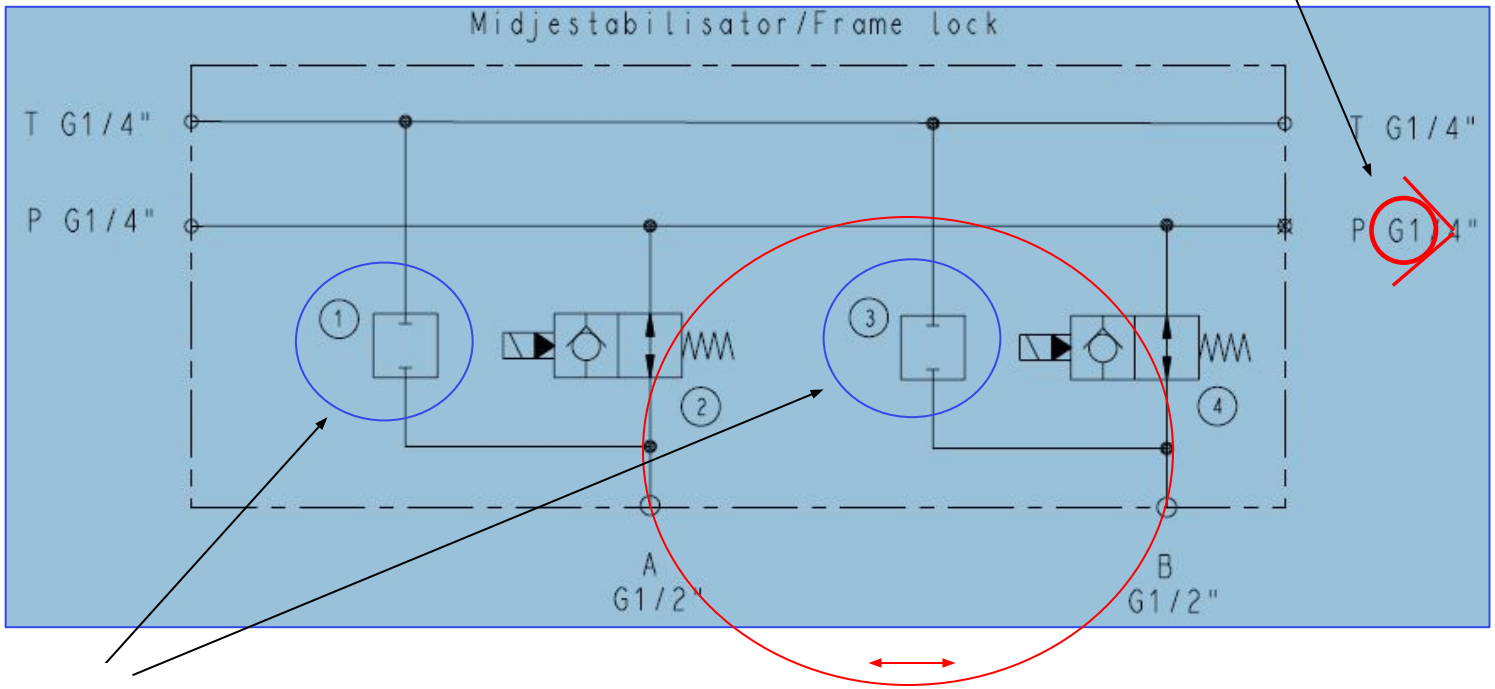


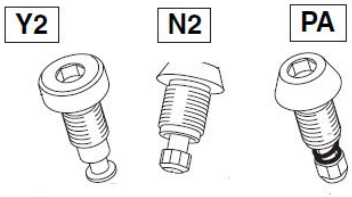


Y2- plug
N2- check valve
PA - Relief & check valve

# Return Line Filter,

## Filter selection parameters

Estimated return oil flow at simultaneous operation, Example:

Slew 65 Lpm

1st Boom Lift 60 Lpm

2nd boom lift 70 Lpm

Tele In 70 Lpm

+aux manifold 20Lpm

- Say total about ~ 350 Lpm

Operating Limitations due to temperature and viscosity:

- 50 Lpm @ viscosity 1000 cSt
- 350 Lpm @ viscosity 125 - 15 cSt

- Select cleanliness target typically 18/16/13 ISO4406 - usually matches 10 micron Beta200
- By-pass valve 1,7 bar
- Initial pressure drop ratio relationship 1/3 of the By-pass -> target dp of about ~ 0,5 bar
- Double the element size to get 3 times as much life expectancy on the element.
  Say dp ~0,25 bar @ 350 Lpm

# Oil EXAMPLE

## Filter selection parameters

VI 173

500 cSt @ -10deg
12,5 St @70deg
13,5cSt @ 80deg

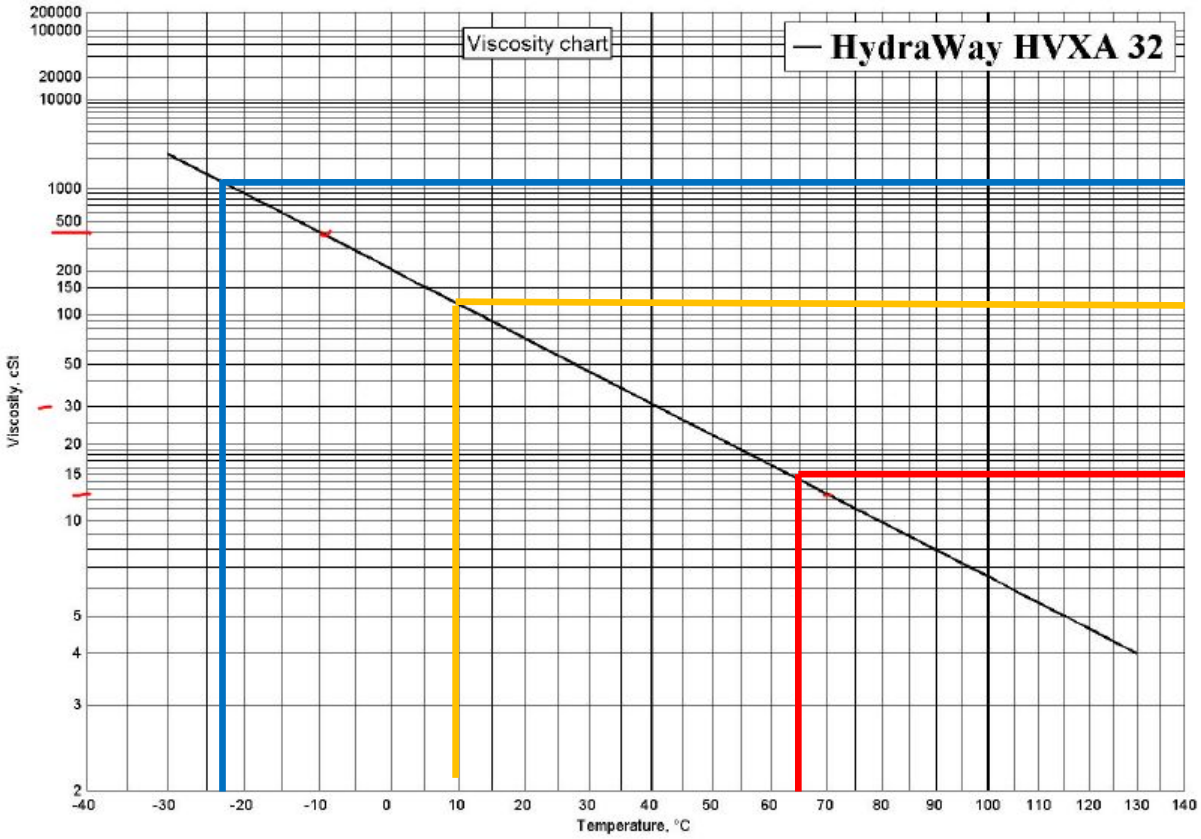


– 20°C / 1000 cST
Reduced speed:
~50 LPM

+ 10°C / 125cSt
Full operation:
~350 Lpm

+ 65°C / 15cSt
Full operation:
~350 Lpm

# Size3 Return Line Filter, Pressure drop

Cold condition (1000 cSt)

GLF32 10 micron @ 50 l/min, 1000 cSt -> dp 1,6 bar
GLF33 10 micron @ 50 l/min, 1000 cSt -> dp 1,3 bar

Normal operation (125 cSt +10C)

GLF32 10 micron @ 350 l/min, 125 cSt -> dp 1,4 bar
GLF33 10 micron @ 350 l/min, 125 cSt -> dp 1,1 bar

Normal operation (15 cSt +65C)

GLF32 10 micron @ 350 l/min, 15 cSt -> dp 0,17 bar
GLF33 10 micron @ 350 l/min, 15 cSt -> dp 0,13 bar

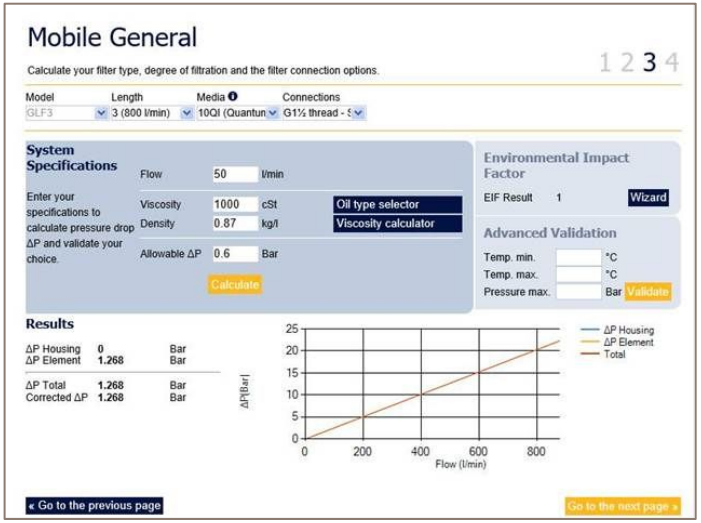


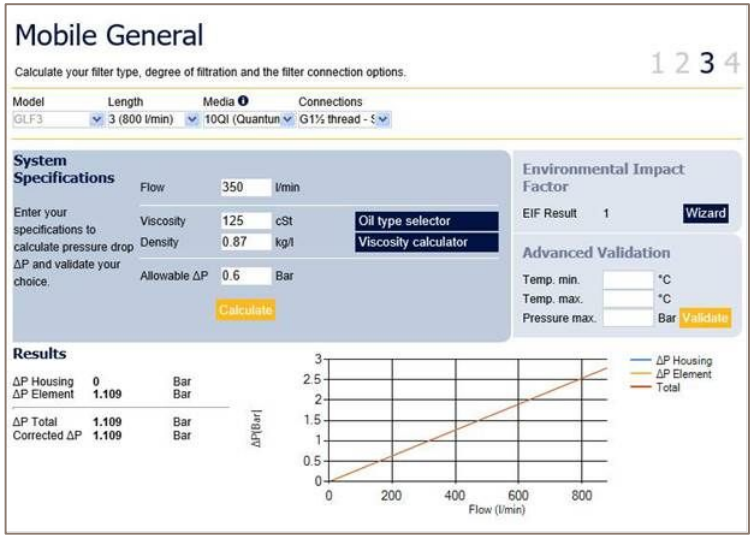


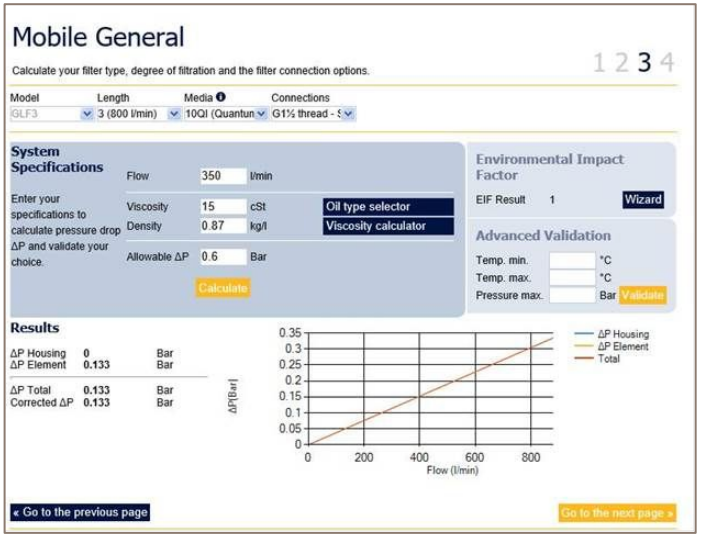

# Size4 Return Line Filter, Pressure drop

The critical situation - warming up from cold condition
Allowing full operation

GLF33 10 micron @ 350 l/min, 125 cSt -> dp 1,1 bar
GLF42 10 micron @ 350 l/min, 125 cSt -> dp 0,8 bar

Normal operation (15 cSt +65C)

GLF33 10 micron @ 350 l/min, 15 cSt -> dp 0,13 bar
GLF42 10 micron @ 350 l/min, 15 cSt -> dp 0,02 bar

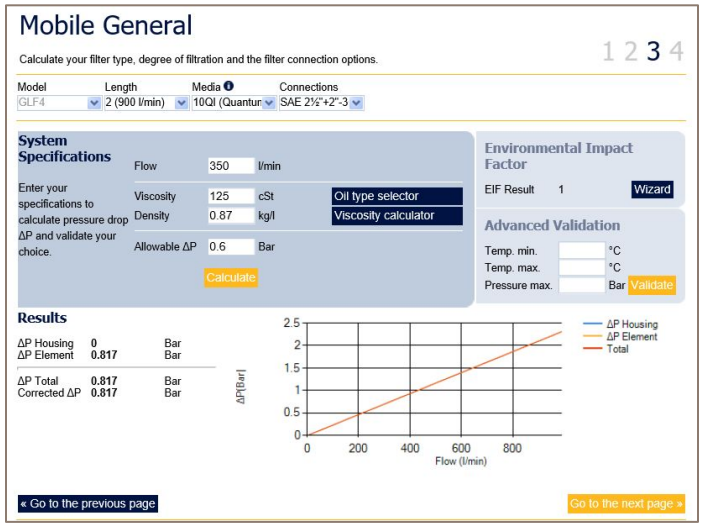


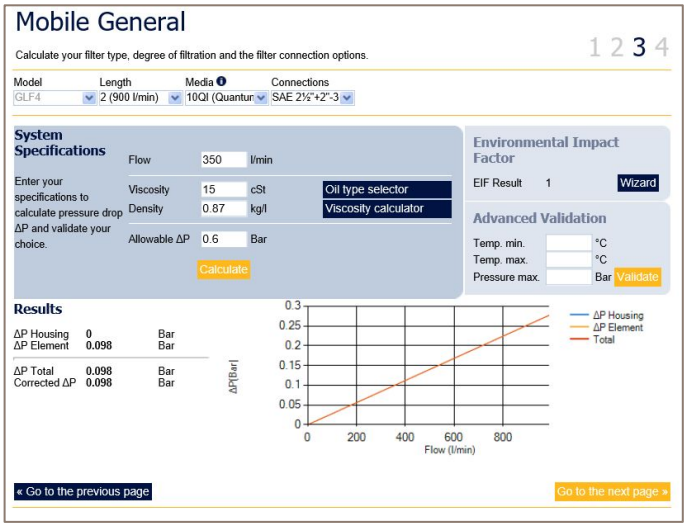

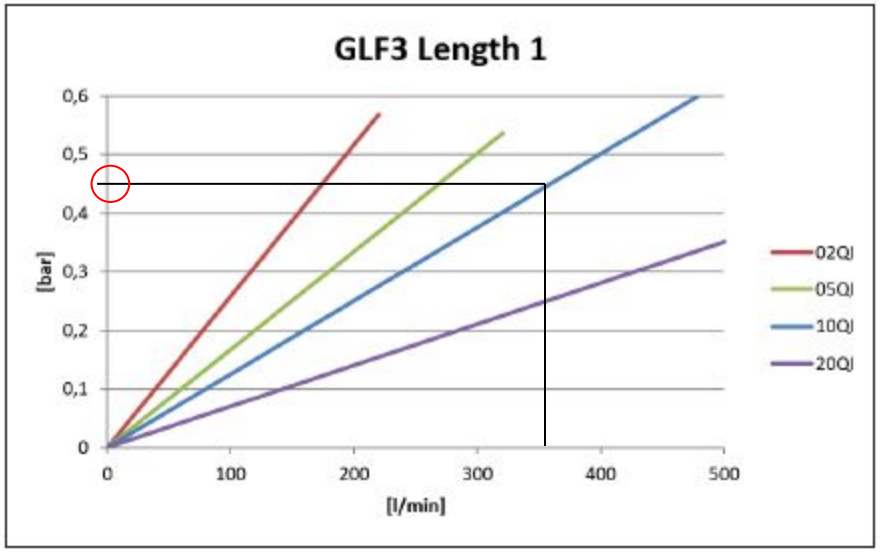
GLF3 Length 1
0,6
0,5
0,4
0,3
0,2
0,1
0
[bar]
0
100
200
300
400
500
[l/min]
02QJ
05QJ
10QJ
20QJ

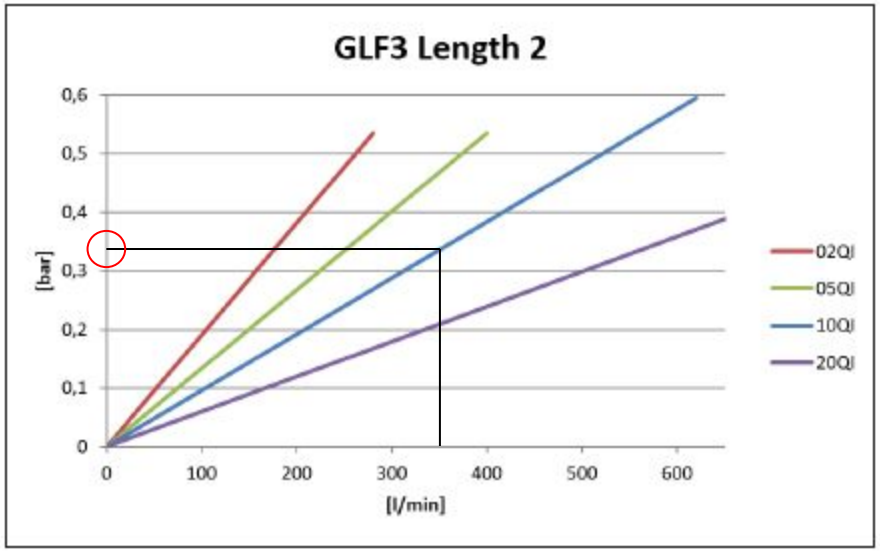
GLF3 Length 2
0,6
0,5
0,4
0,3
0,2
0,1
0
[bar]
0
100
200
300
400
500
600
[l/min]
02QJ
05QJ
10QJ
20QJ

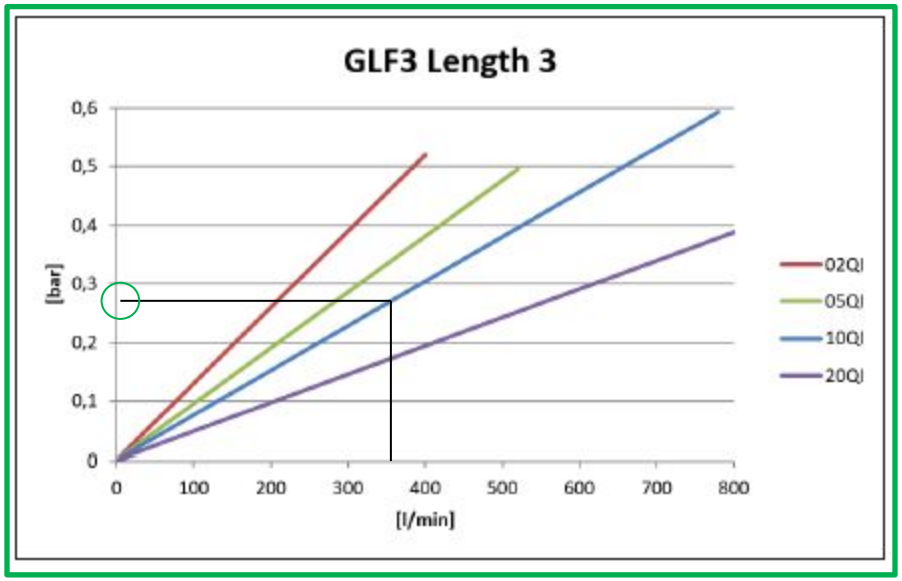
GLF3 Length 3
0,6
0,5
0,4
0,3
0,2
0,1
0
[bar]
0
100
200
300
400
500
600
700
800
[l/min]
02QJ
05QJ
10QJ
20QJ

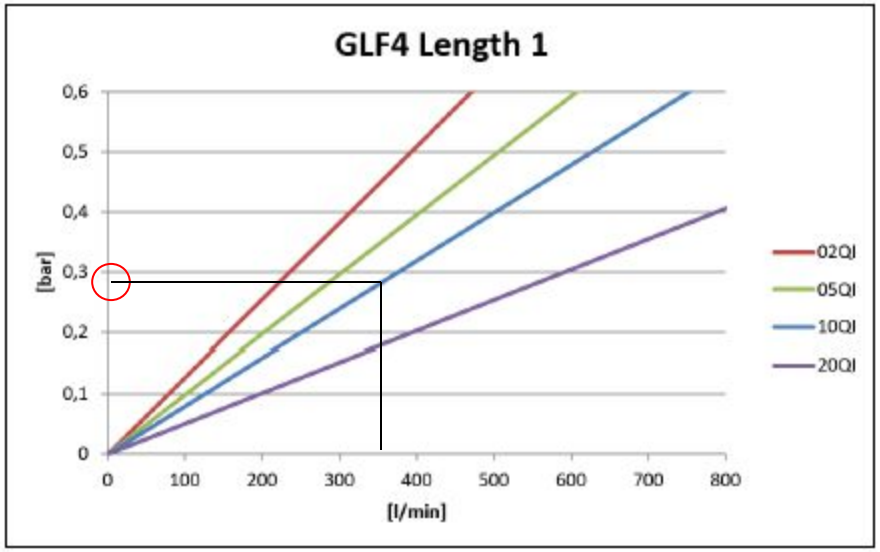
GLF4 Length 1
0,6
0,5
0,4
0,3
0,2
0,1
0
[bar]
0
100
200
300
400
500
600
700
800
[l/min]
02QI
05QI
10QI
20QI

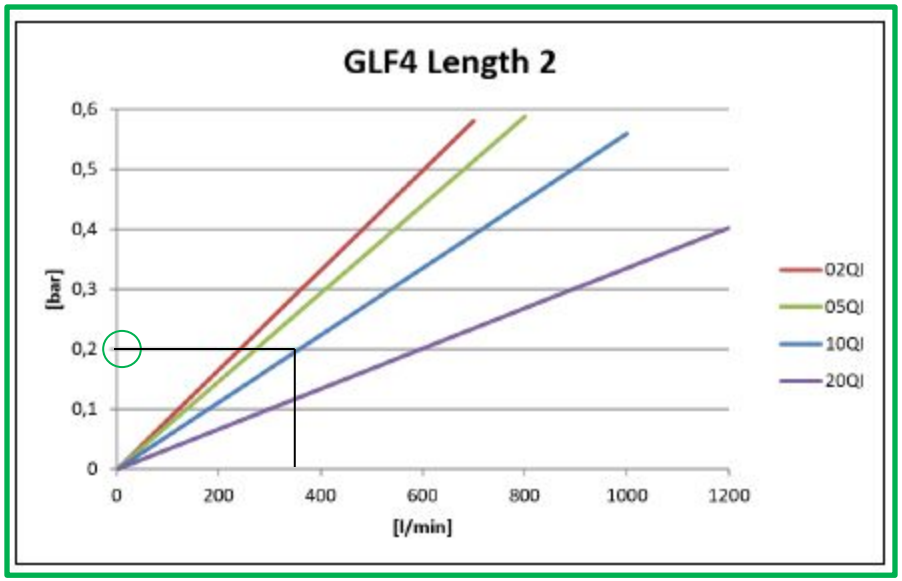
GLF4 Length 2
0,6
0,5
0,4
0,3
0,2
0,1
0
[bar]
0
200
400
600
800
1000
1200
[l/min]
02QI
05QI
10QI
20QI

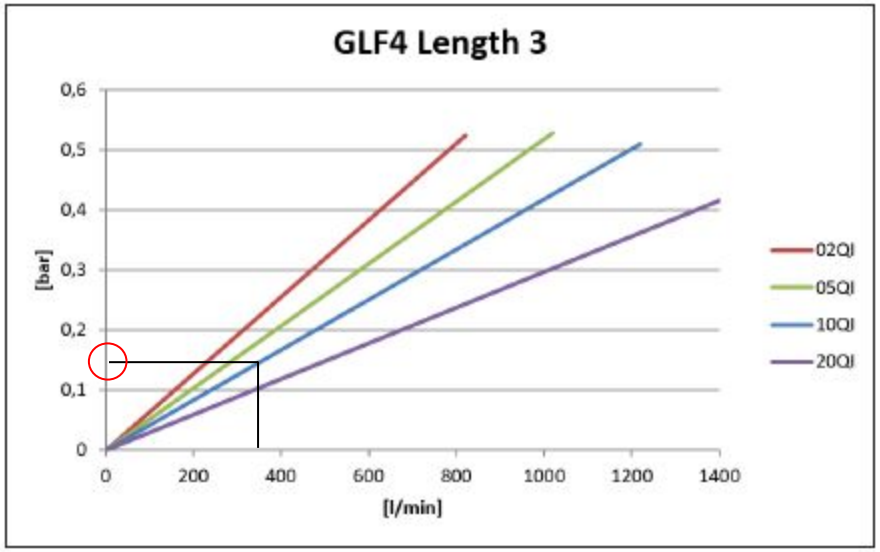
GLF4 Length 3
0,6
0,5
0,4
0,3
0,2
0,1
0
[bar]
0
200
400
600
800
1000
1200
1400
[l/min]
02QI
05QI
10QI
20QI

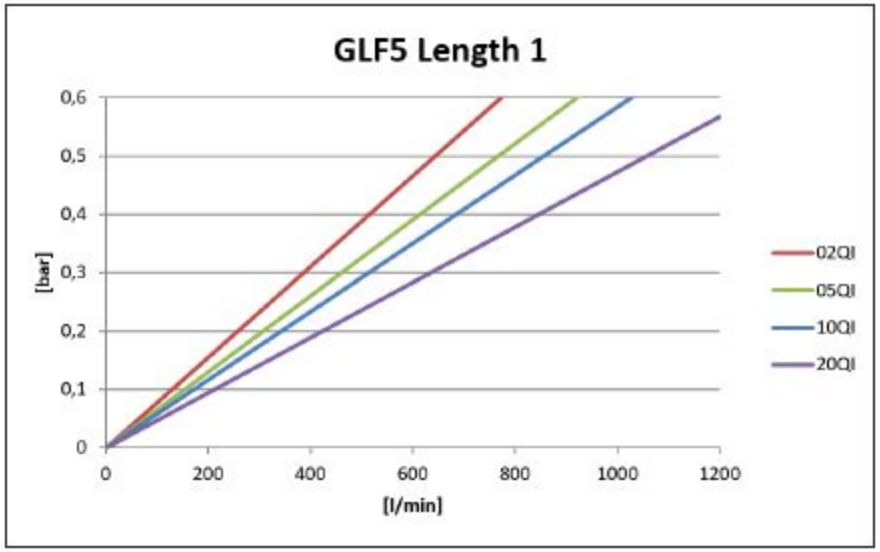
GLF5 Length 1
0,6
0,5
0,4
0,3
0,2
0,1
0
[bar]
0
200
400
600
800
1000
1200
[l/min]
02QI
05QI
10QI
20QI

# Return Line Filter,

## Filter selection

Filter configuration:

- GLF4 Length2, ( alternatively GLF3 Length3)
- Funnel
- Magnet column
- Filling port
- GLI version instead of GLF ?
- Further options to be discussed with the customer..

- ..


Thank You!
Parker