Computers in our life

Компьютеры в нашей жизни

Презентация урока английского языка

(C) Ливенцева И.Ф., к.ф-м.н.
Гимназия №56, 2007 г.

Цель урока

Цель урока состоит в расширении и тренировке вокабуляра по теме «Интернет», которая входит как составляющая часть в экзаменационную разговорную тему «Средства массовой информации».

Пояснения к презентации

Настоящая презентация представляет собой дидактиче- ский материал, сопровождающий урок английского языка для учеников 8 класса гимназии. Урок должен проводиться после изучения модуля «Интернет» в учебнике “Opportunities” Pre-Intermediate. Презентация направлена на закрепление и расширение полученного учащимися материала в форме наглядных упражнений. Та часть презентации, где приведен диалог позволяет не только тренировать слова темы, но также вводят разговорные штампы (chunks of language), часто употребляемые в разговорной речи. Урок заканчивается аудированием по теме.

Computers in our life

Find the item in the picture and write the corresponding letter next to the word

password	c	online shopping	h	keyword	a	website	d
mouse	f	search engine	g	click	b	screen	e

checking

Fill in the gaps with the words from the box

online shopping	keyword	password	click
search engine	websites		screen

When you want to find information on the web, it is helpful to use a search engine such as Google or Yandex. You type in a keyword or a phrase, click in "GO" and a list of websites appears on your computer screen. Many people use the web for online shopping or banking. To enter a secure site, you usually need to enter your username and a password.

checking

Put the following computer operations in the correct order

a Work

b Close the application

c Open the application

d Print your work

e Save your work on the hard disk

f Switch off the computer, the monitor and the printer

g Switch on the computer, the monitor and the printer

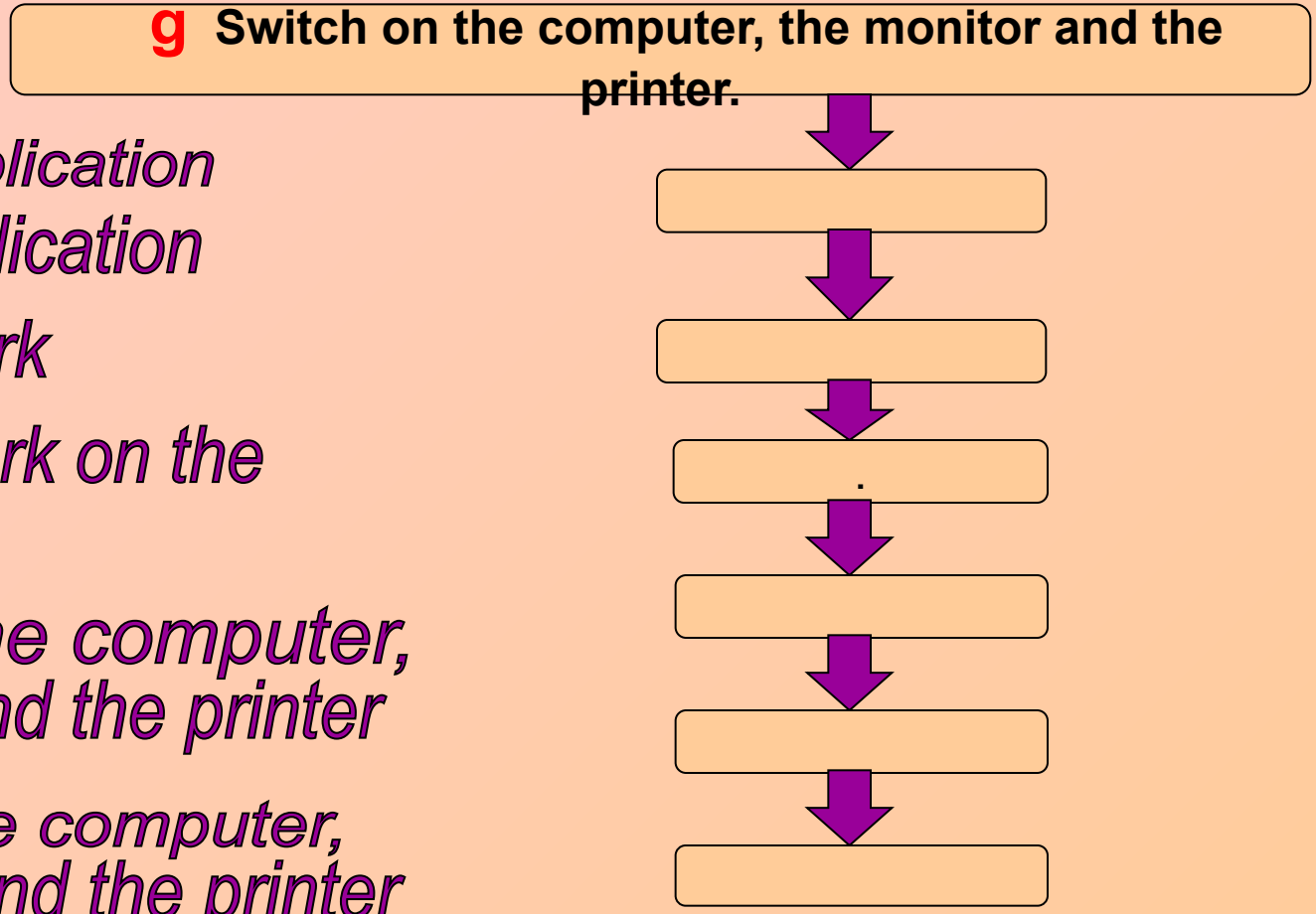

The first part is done for example

Check your answers

g Switch on the computer, the monitor and the printer

c Open the application you want

a Work

e Save your work on the hard disk.

d Print your work

b Close the application.

f Switch off the computer, the monitor and the printer

Asking for technical help

Dialogue

[illegible] do.

[illegible] start again.

[illegible] sticks

in the same place.

Now try to fill in the gaps

Ron is ______ ________ it off and start again.

It's OK. Thanks a lot.

even ______ just sticks in the same place.

Make sure you've guessed correctly

No problems.

Ron switch speaking

Carol try help

cursor crashed

Complete the sentences with words and phrases from the box

website	computer viruses	bug
emails	go online	crashes

Nowadays you can ___go online___ ***if your brother is using the telephone line to talk to his friends***

Many people send and receive ___emails___ ***rather then telephoning or using "snail mail" (letter post).***

These days you can buy things on the Internet by going to the company's ___website___***.***

checking

Complete the sentences words and with phrases from the box

emails	computer viruses	bug
website	online shopping	crashes

Sometimes the computer crashes ***,and then it is impossible to use it. You usually have to switch it off and start again.***

Some people create computer viruses ***, which infect any computer they arrive at. They are dangerous a can destroy everything on the hard disk.***

If a computer programme has a bug ***, it won't work properly.***

checking

Listening

Listen to the interview with a teacher who is talking about the role of computers in education. Then read the statements below and décor ide whether they are true (T) or false (F).

1. **At school, computers are useful only in the language lessons.** F
2. **It takes a long time to find online publications.** F
3. **You can present your opinions on various topics over the Internet..** T
4. **You can check the meanings of new words on special websites.** T
5. **In every school, students have one lesson per week for surfing through the Internet.** F

checking